GE-897

Pro'sKit®

3in1 TRiBO

KEYPAD CODING ROBOT

三合一按鍵編程機器人



Assembly & Instruction Manual

組裝說明手冊

目 錄
Contents

產品介紹 Product Introduction 1

自備工具 Tools You May Need 1

零件清單 Mechanical Parts List 1

塑膠模型零件 Plastic Parts 2

小技巧提醒 Read it Before Assembly 2

馬達組裝 Motor Module Assembly 4

左齒輪箱組裝 Gear Box Module (Left) Assembly 4

右齒輪箱組裝 Gear Box Module (Right) Assembly 6

按鍵組裝 Keypad Module Assembly 8

電池盒組裝 Battery Module Assembly 9

狙擊槍組裝 Shooting Module Assembly 10

全向輪組裝 Omni Wheel Module Assembly 11

掃帚組裝 Broom Module (Left & Right) Assembly 11

後輪組裝 Rear Wheel Module Assembly 12

輪胎組裝**(A&B)** Wheels Module (A & B) Assembly 12

飛鏢組裝 Dart Module Assembly 12

支架組裝 Bracket Module Assembly 12

齒輪組裝**(A&B)** Gears Module (A & B) Assembly 12

創意小畫家組裝 Doodler Assembly 13

掃地機器人組裝 Sweeper Assembly 17

狙擊神射手組裝 Shooter Assembly 23

操作方式 How to Program Your Robot 29

更換電池方式 How to Replace the Batteries 31

簡易故障排除 Trouble Shooting 32

3合1按鍵編程機器人
3 IN 1 TRIBO

產品介紹 Product Introduction

對於機器人只能走來走去感到無趣嗎?編程一定要用電腦嗎?編程是不是都很難?3合1按鍵編程機器人以簡單、直覺的方式解決以上煩惱!藉由頭部的五個按鍵，大、小朋友們就能輕易地設計出機器人的動作 －前進、後退、向左、向右、旋轉等，即便是初學者也能輕易上手! 模型組裝結構，讓您搭接出不同的機器人造型做出豐富的動作，善用您的創造力、觀察力、邏輯能力，做出你的狙擊神射手、創意小畫家和掃地機器人吧!

TRIBO is a one-of-a-kind DIY Keypad Coding Robot. This mission-based adorable coding buddy is designed to inspire every user with a beginner-friendly coding method that doesn't require a digital device (computer/tablet/phone). You can build and rebuild the parts into 3 different designs: Shooter, Doodler and Sweeper. The unplugged TRIBO features a coding keypad on top of his head, where kids can intuitively master the programming practices. The coding system allows the robot to move in 8 different directions: front, back, left, right, back left, back right, left rotation and right rotation. Users can effortlessly enjoy the fun of coding by pressing the buttons and watching TRIBO perform the various commands right away!

警 告 Warning

1.本玩具內含小物件，請勿讓三歲以下孩童取得，以免放入口中造成窒息。
Choking hazard - Small parts. Not for children under 3 years.
2.兒童使用剪切工具時，請家長指導使用方式，並請在家長監督下使用，以免發生意外。
Adult supervision is recommended when children use scissors.
3.為避免嬰兒或兒童產生窒息的危險，請於拆卸後立即將塑膠袋銷毀或遠離嬰兒及兒童。
To avoid danger of suffocation, keep the plastic bag away from babies and children.

自備工具 Tools You May Need

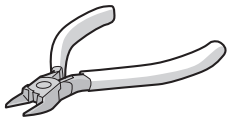

斜口鉗
Diagonal Cutter

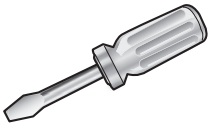

⊖ 一字起子
Screwdriver

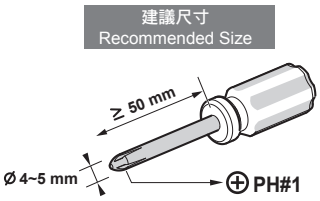

⊕ 十字起子
Screwdriver

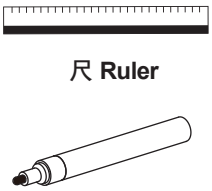

尺 **Ruler**

麥克筆(細體)
Marker Pen (Fine)



AAA電池 x 4
Battery(AAA) x 4
請使用鹼性電池(出貨不含)
Alkaline batteries are recommended

零件清單 Mechanical Parts List

! 部分零件含有銳利的邊緣及尖角，組裝時請注意 Product contains functional edges and sharp points.

P1 小齒輪(白色) Pinion Gear (White)	P2 齒輪(白色) Gear 36/14T (White)	P3 齒輪(灰色) Gear 32/10T (Gray)	P4 齒輪(黃色) Gear 36/10T (Yellow)
 2 pcs	 2 pcs	 2 pcs	 4 pcs
P5 齒輪(橘色) **Gear 36T (Orange)**	**P6** 出力齒輪(灰色) **Output Gear (Gray)**	**P7** 六角軸 **Hex Shaft**	**P8** 圓軸 **Round Shaft**
 2 pcs	 2 pcs	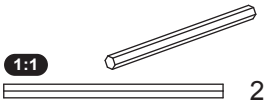 1:1 2 pcs	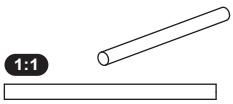 1:1 2 pcs

P9 自攻螺絲 Tapping Screw	P10 自攻螺絲 Tapping Screw	P11 彈簧 Spring
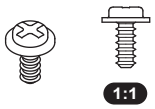 1:1 8 pcs	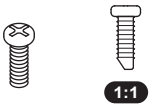 1:1 16 pcs	 2 pcs
P12 小鐵球 **Steel Ball**	**P13** 泡棉貼(大) **Sponge (Big)**	**P14** 泡棉貼(小) **Sponge (Small)**
 1 pc	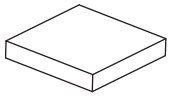 2 pcs	 2 pcs

P15 馬達端子組 Motor with Connector	P16 電池座 Battery Holder with Connector	P17 電路板 PC Board	P18 墊片 Washer
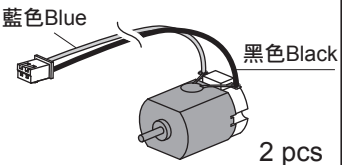 2 pcs	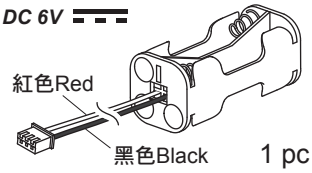 1 pc	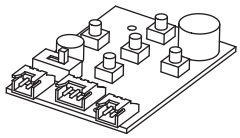 1 pc	 1 pc

塑膠模型零件 Plastic Parts

此產品為模型組裝，經拆封修剪或包裝不完整，恕不退換
Goods cut are not returnable

請依照組裝步驟將所需的零件剪下，以免組裝時造成零件混淆
Cut the plastic parts when they are required. Do not cut them in advance.

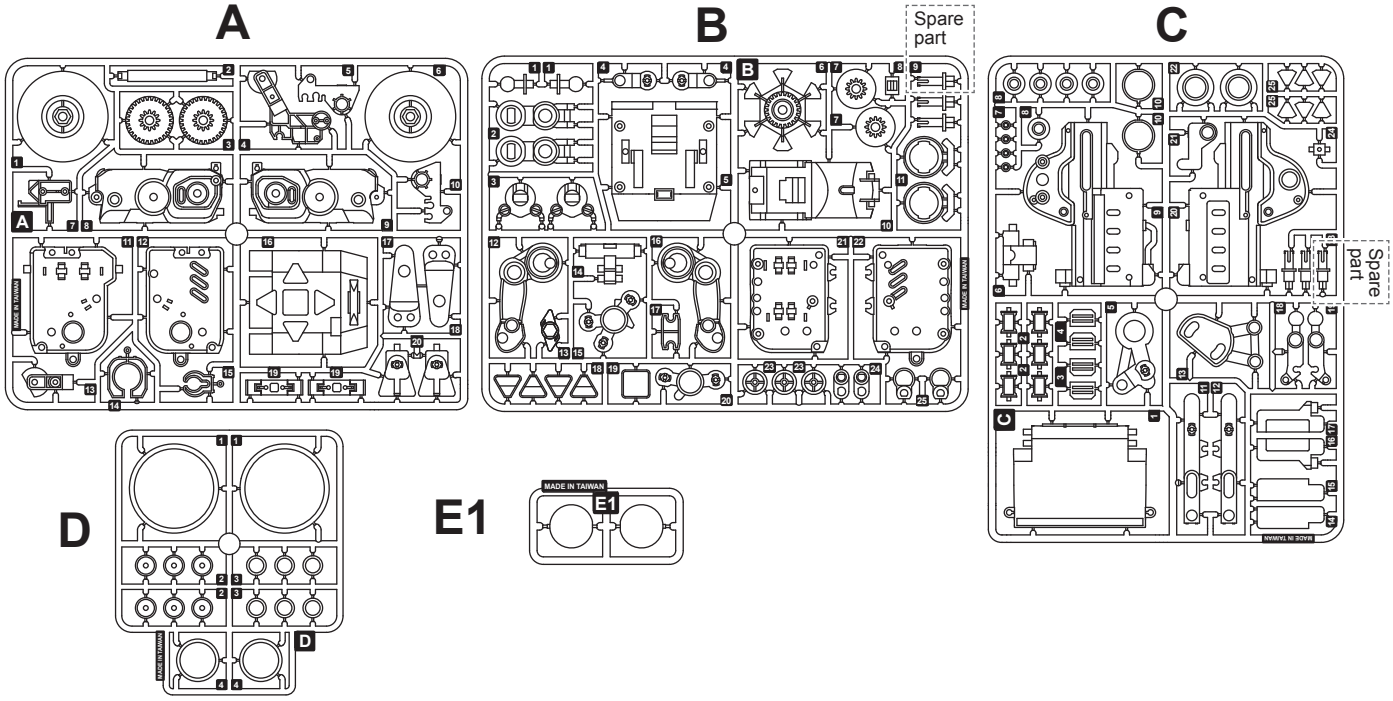

務必注意 Must-know

小技巧提醒 Read it Before Assembly

開始組裝前請仔細閱讀以下說明
Please read through and follow the tips below before assembly.

去除毛邊 Remove burrs

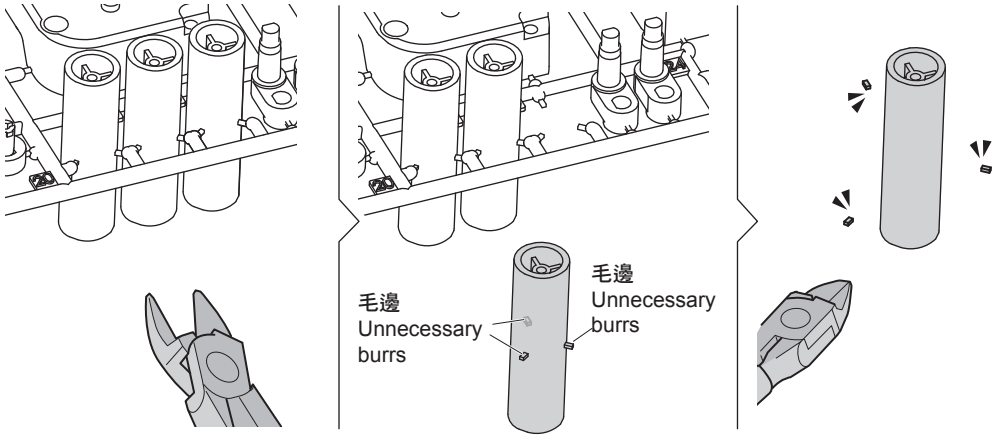

零件剪下時請將毛邊剪切乾淨，以免產生間隙導致運作不良
It happens a lot some burrs are left at the edge of plastic parts after cutting them off. Make sure the burrs are completely removed to avoid operation malfunction.

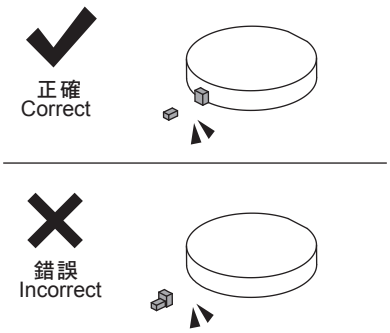

請勿過度剪切非毛邊的塑膠零件，以免組裝不確實，導致運作不良
Trim off the burrs ONLY. Do not trim off the protrusion belonged to original plastic parts. All features of parts should be kept completely.

緊固螺絲 Fasten tapping screws



請使用正確的起子頭型(#1)，依照下面的步驟將螺絲鎖緊
Use corresponding (size-compatible) screwdriver. By following steps below, you can fasten the tapping screws perfectly.

將起子頭對準螺絲 Put the screwdriver towards the top of screws.	(1) 開始擰轉 (2) 鎖固感越來越緊繃 (3) 繼續擰轉 (1) Screw in (2) Feel the tension getting higher (3) Keep screwing	重複動作直到無法再擰動螺絲為止 Repeat until screws are tightly fastened.

請務必將螺絲確實鎖緊至底
Please lock screws all the way down to the bottom. If they are not fastened tightly enough, parts may come off. The product may consequently not work.



拆卸工具:使用B14卸下B9或C23(變形時才會用到) **Disassembly Tool : B14 to use on B9 & C23**

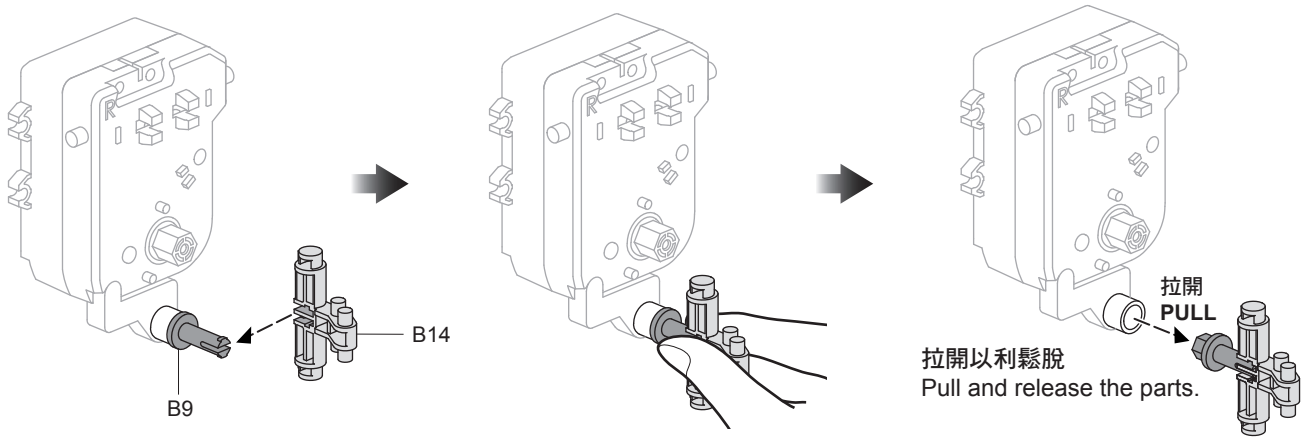

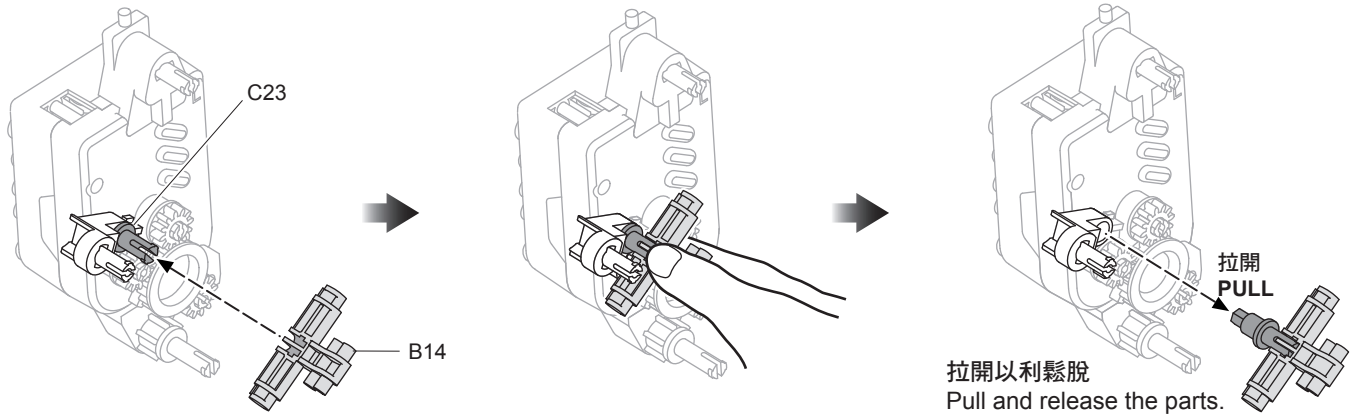

拆卸技巧 **Disassembly Tips**

使用一字起子 Use a ⊖ screwdriver.

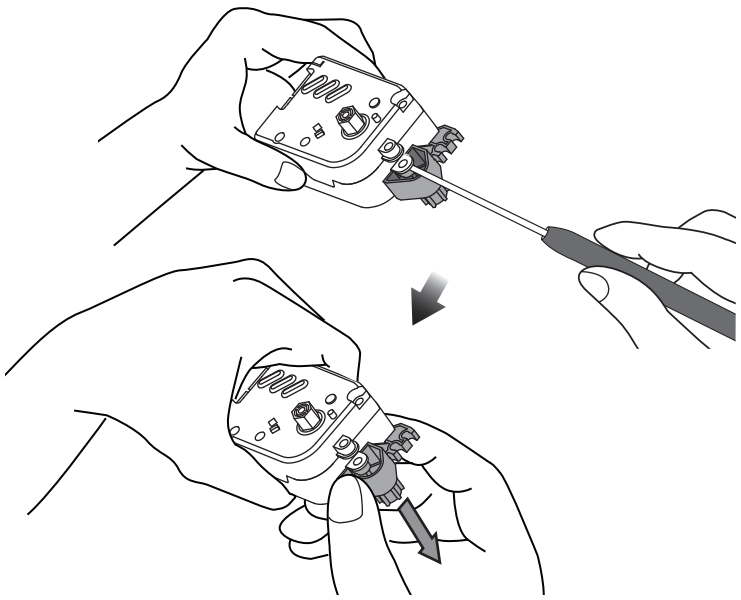

邊扭轉邊拉開 Twist and pull simultaneously.

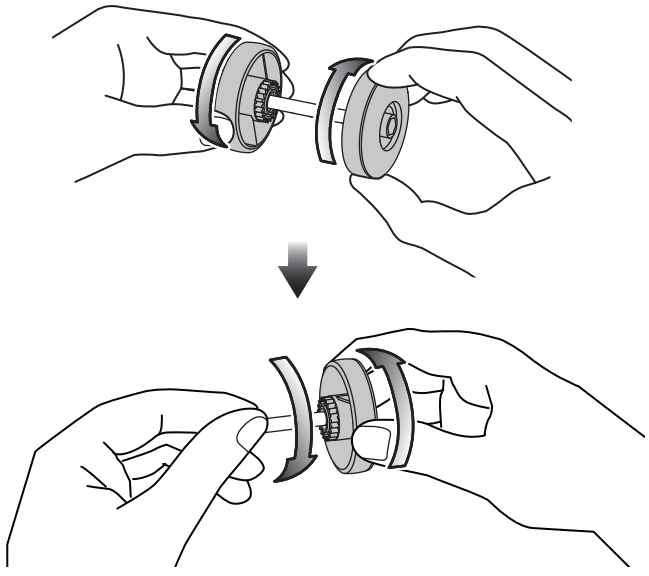

拔開端子 **Loose the Plug**

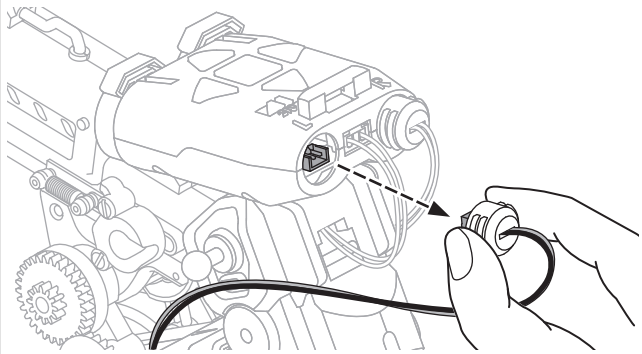

請如圖示拔開連接電池盒的端子以利拆裝機器人
When disassembling the robot, feel free to loose the plug by pulling the battery case cables as illustrated.

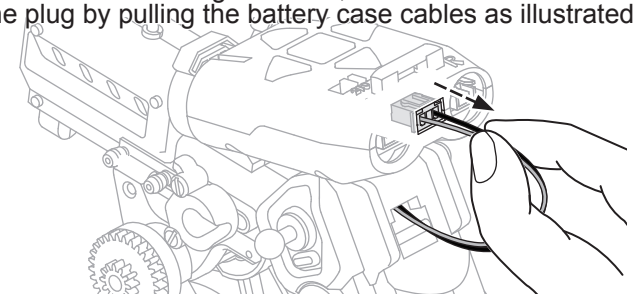

馬達組裝 Motor Module Assembly

1

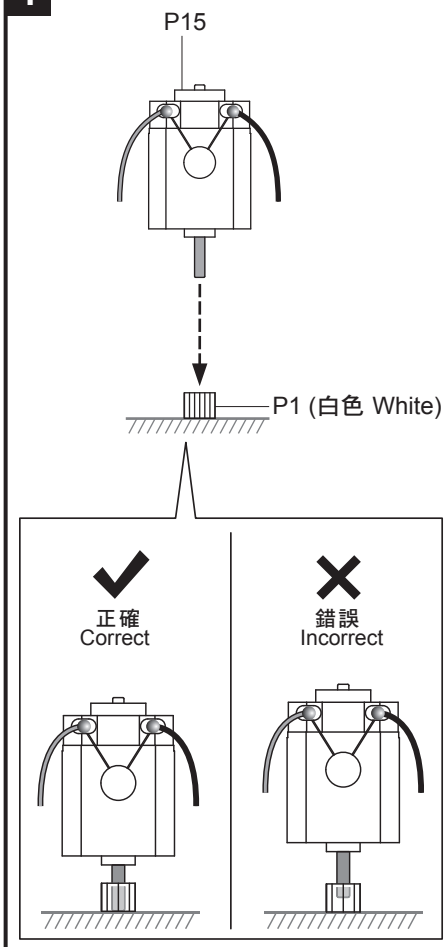

2 安裝C3、C4時，請注意方向是否正確
Pay attention to the direction when assembling C3 & C4

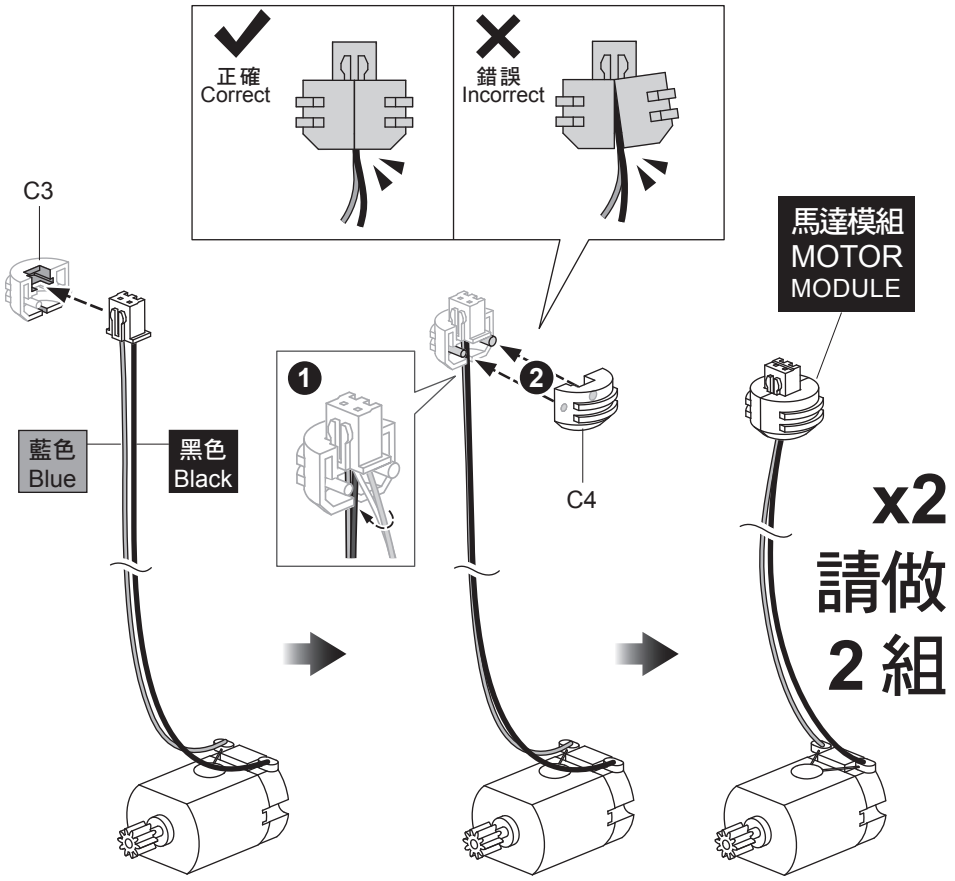

左齒輪箱組裝 Gear Box Module (Left) Assembly

1

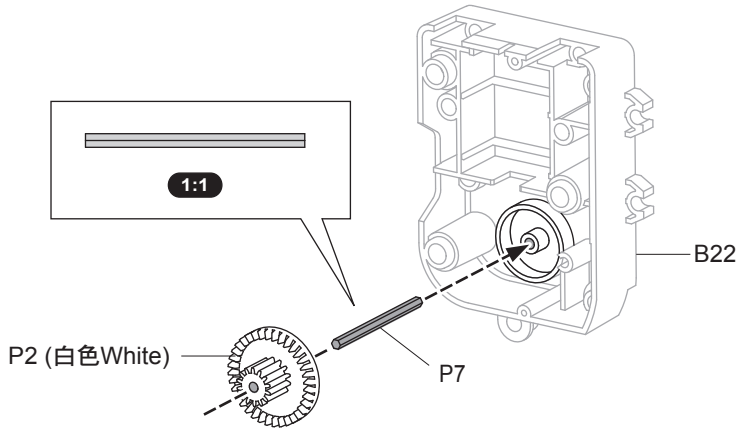

3

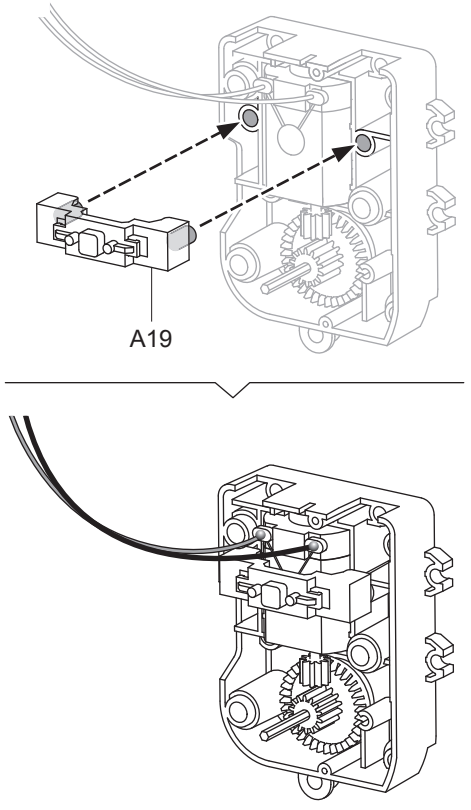

2

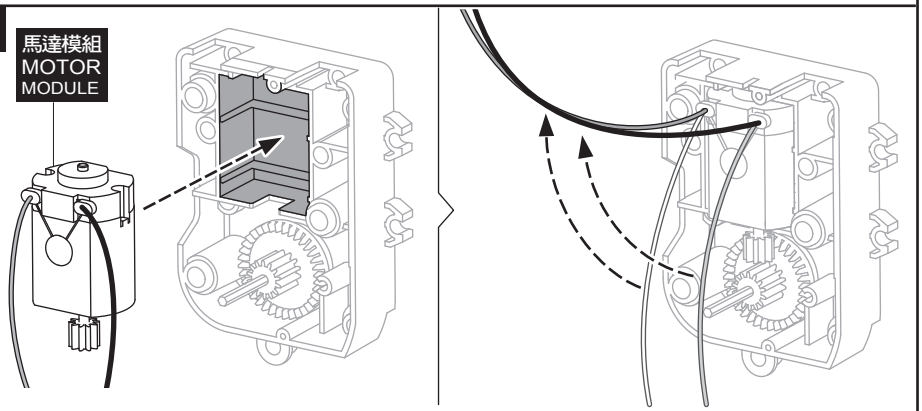

4

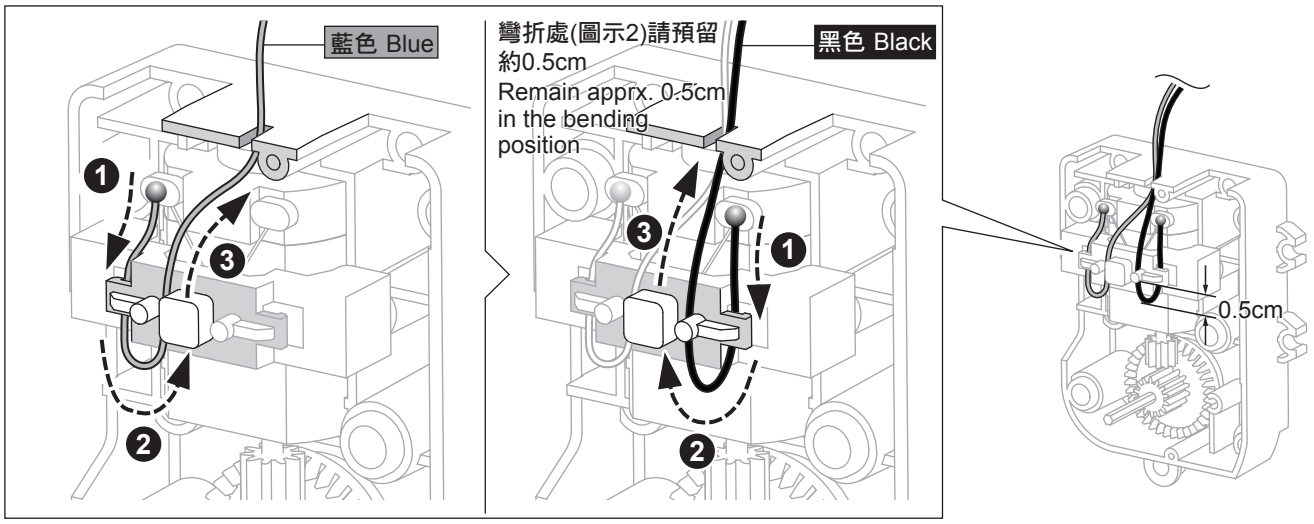
藍色 Blue
彎折處(圖示2)請預留約0.5cm
Remain apprx. 0.5cm in the bending position
黑色 Black
0.5cm

5

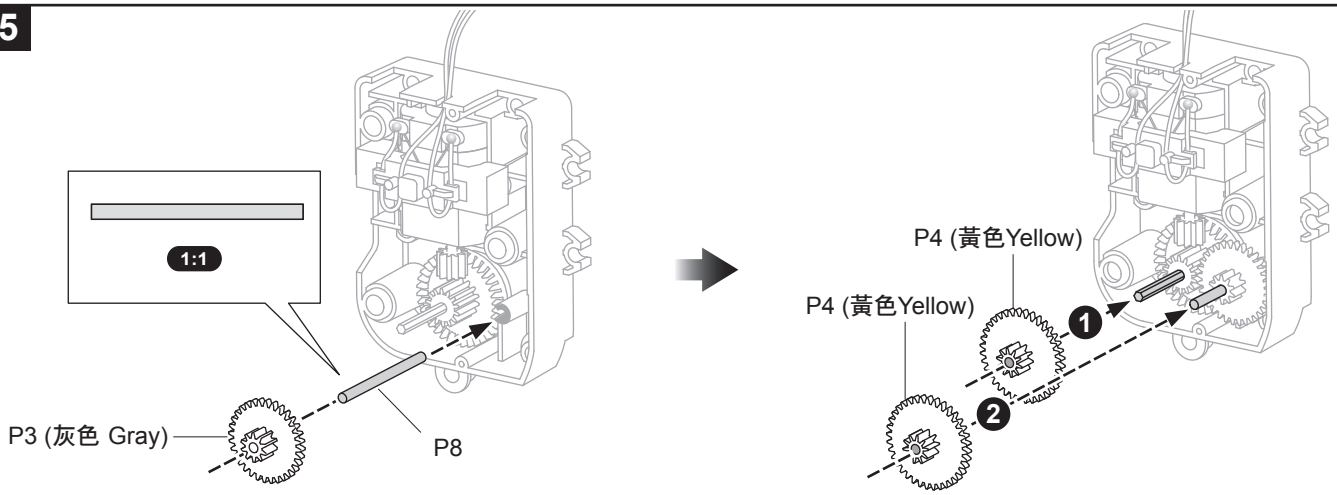
1:1
P3 (灰色 Gray)
P8
P4 (黃色Yellow)
P4 (黃色Yellow)

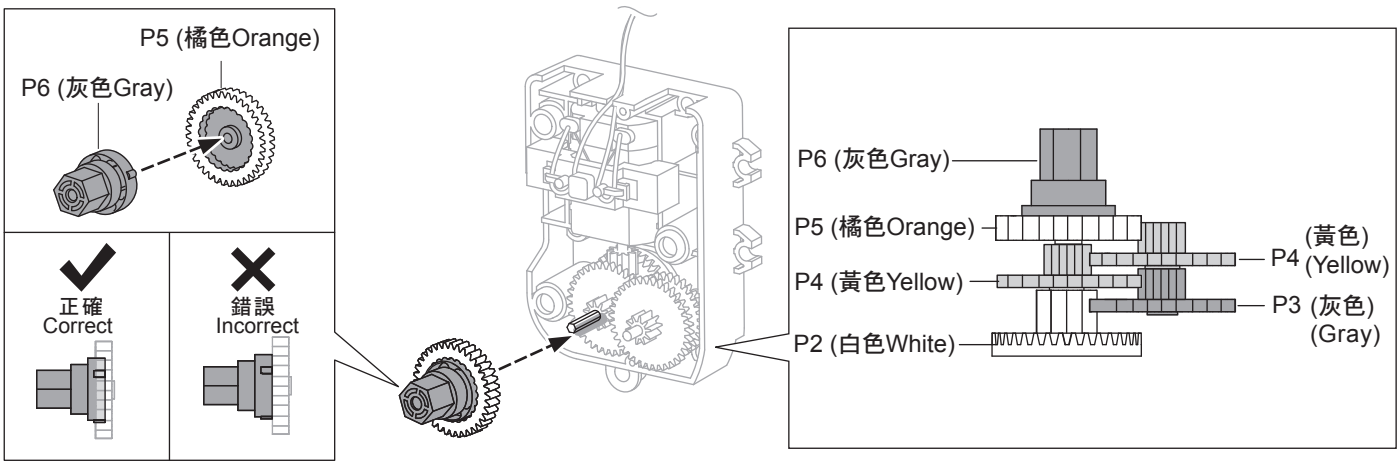
P5 (橘色Orange)
P6 (灰色Gray)
正確
Correct
錯誤
Incorrect
P6 (灰色Gray)
P5 (橘色Orange)
P4 (黃色Yellow)
P2 (白色White)
(黃色)
P4 (Yellow)
P3 (灰色)
(Gray)

6

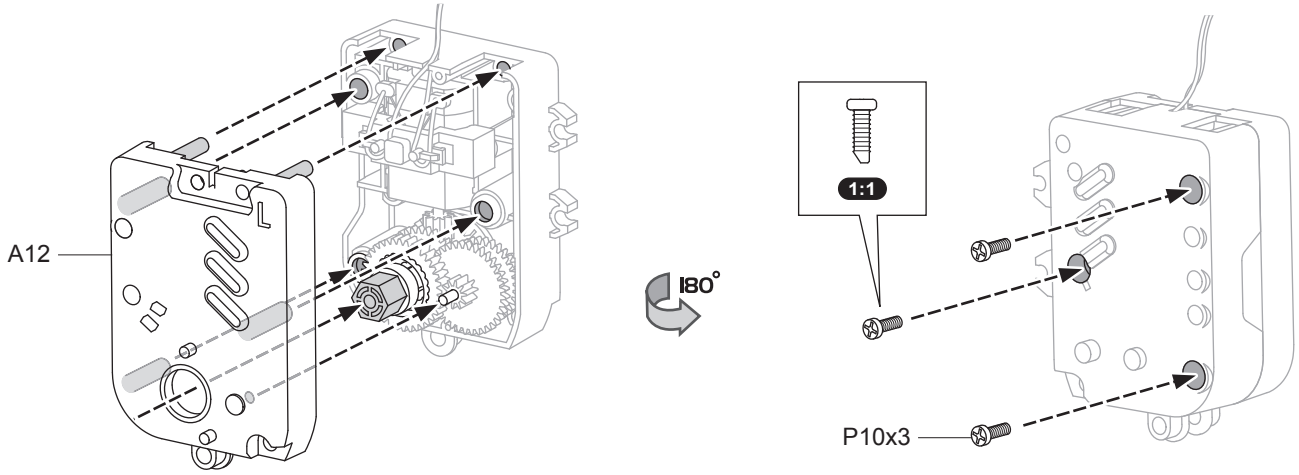
A12
180°
1:1
P10x3

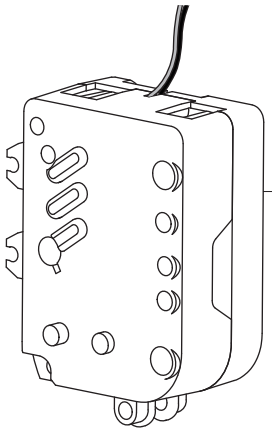

右齒輪箱組裝 Gear Box Module (Right) Assembly

1

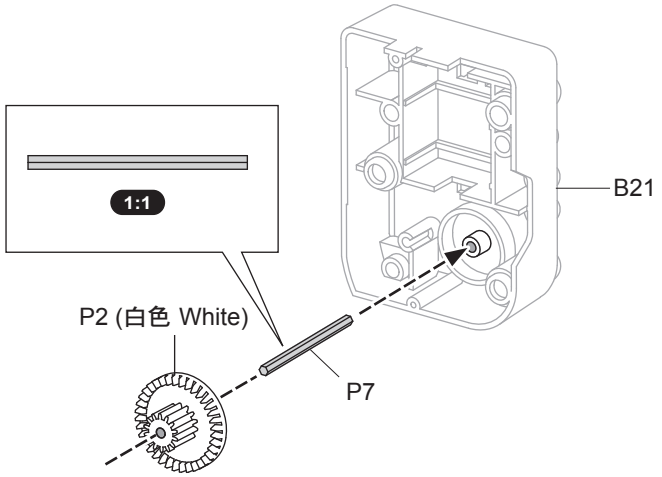

2

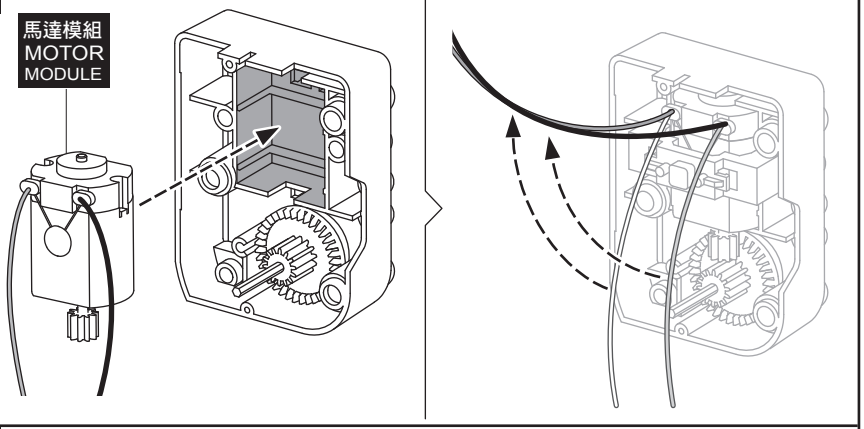

3

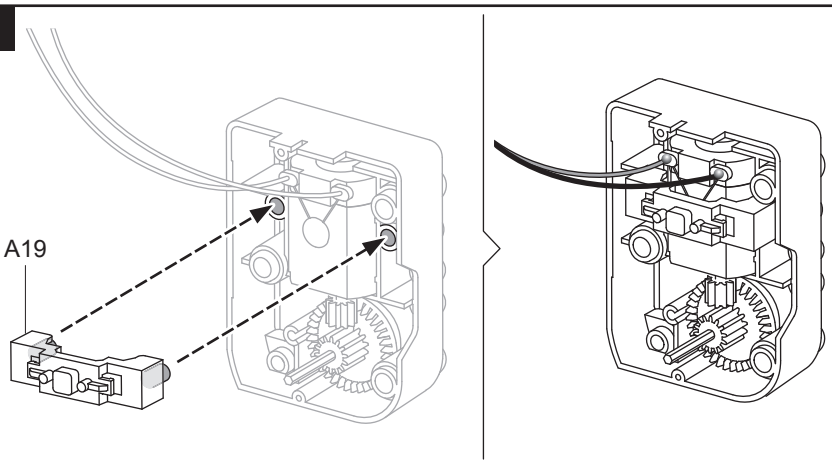

4

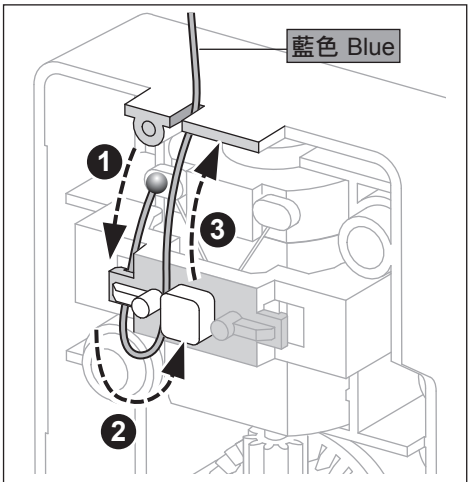

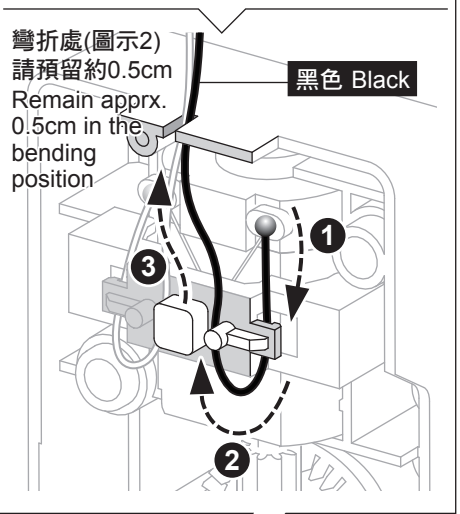

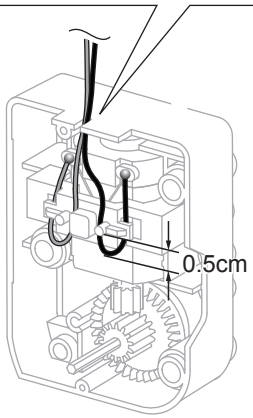

5

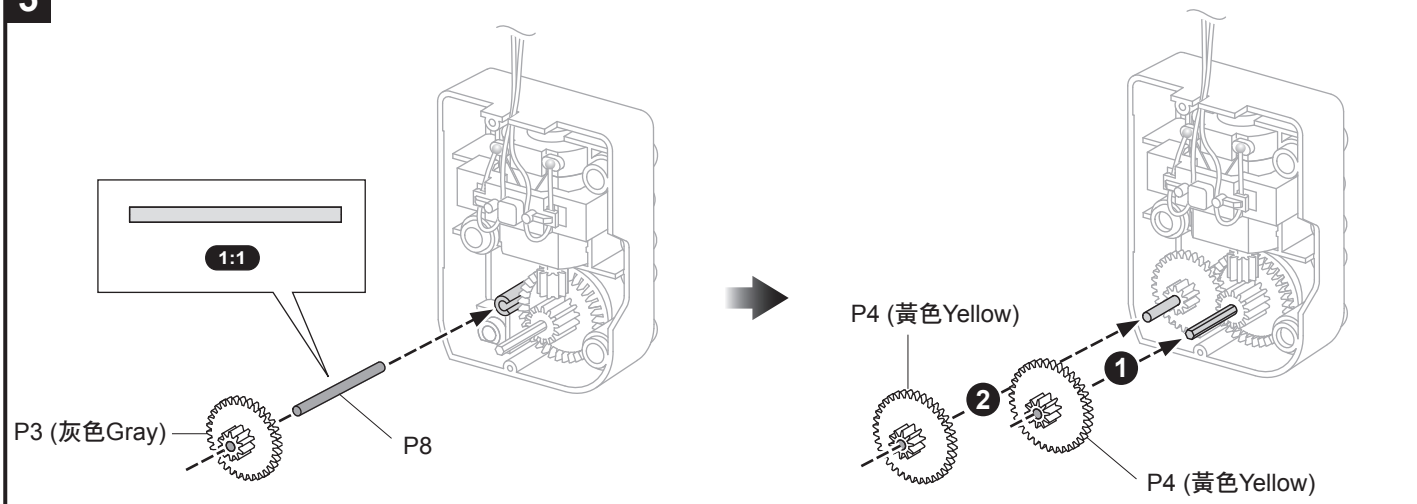
1:1
P3 (灰色Gray)
P8
P4 (黃色Yellow)
2
1
P4 (黃色Yellow)

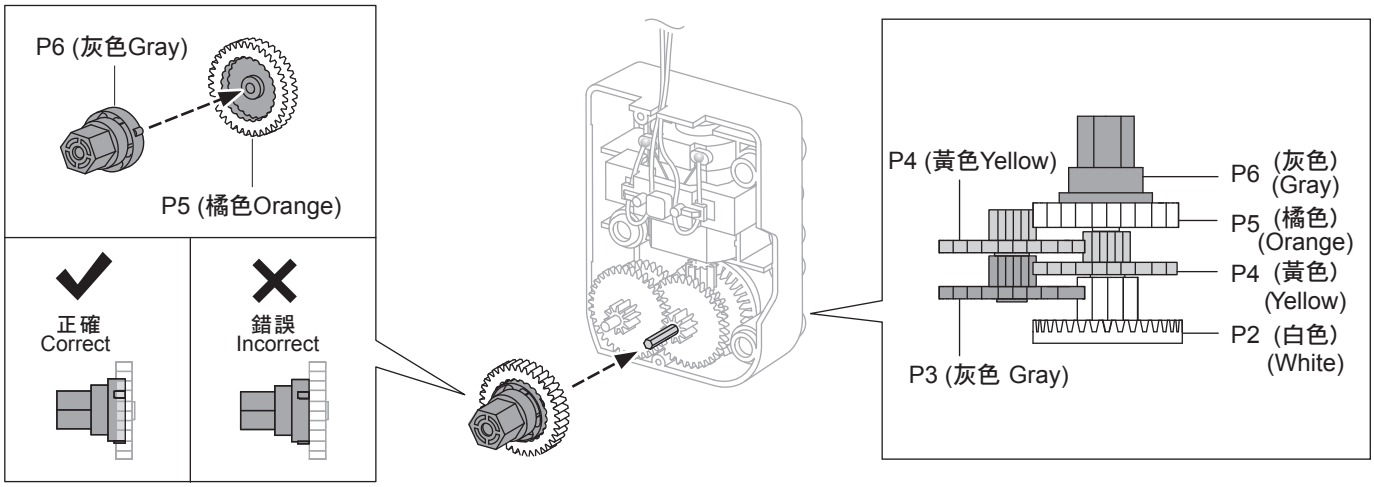
P6 (灰色Gray)
P5 (橘色Orange)
正確
Correct
錯誤
Incorrect
P4 (黃色Yellow)
P6 (灰色) (Gray)
P5 (橘色) (Orange)
P4 (黃色) (Yellow)
P2 (白色) (White)
P3 (灰色 Gray)

6

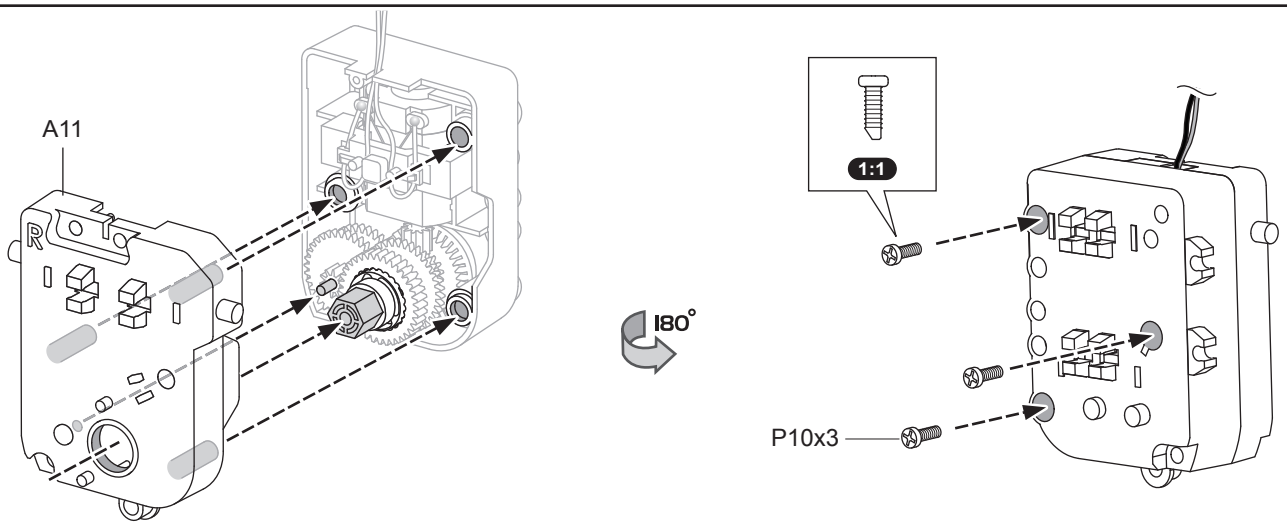
A11
R
180°
1:1
P10x3

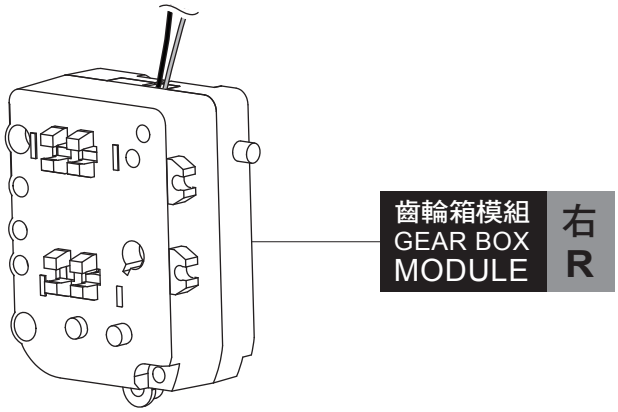
齒輪箱模組
GEAR BOX
MODULE
右
R

按鍵組裝 Keypad Module Assembly

1 注意B18方向是否安裝正確
Pay attention to the right direction of B18

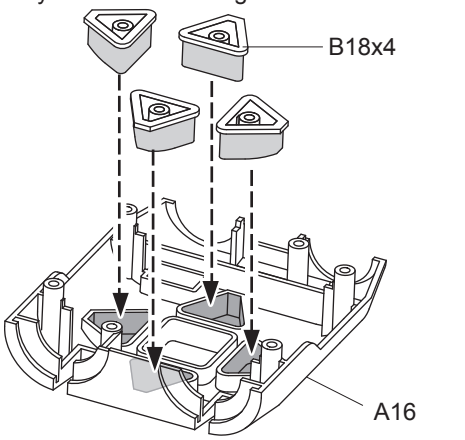

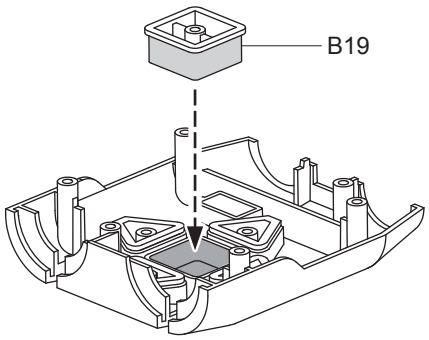

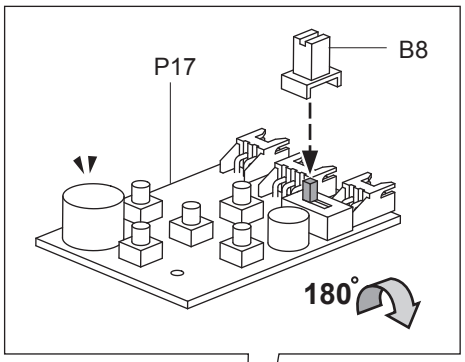

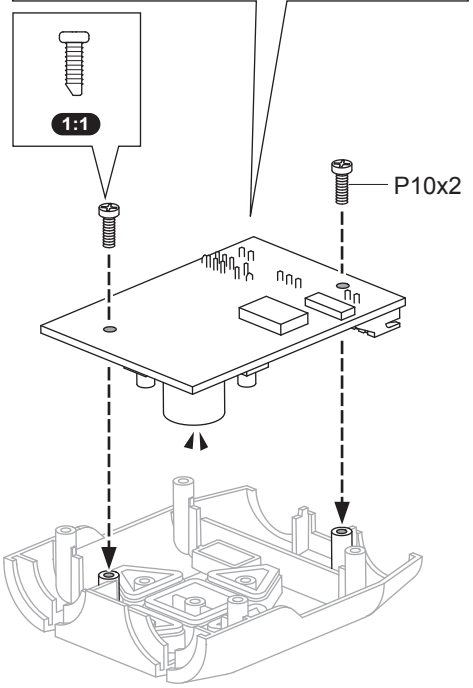

2

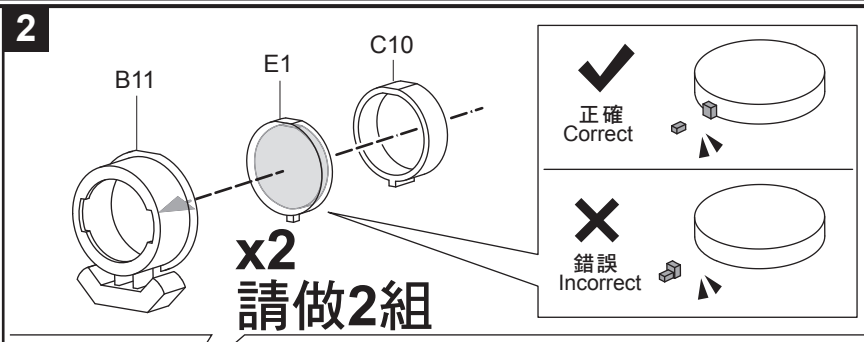

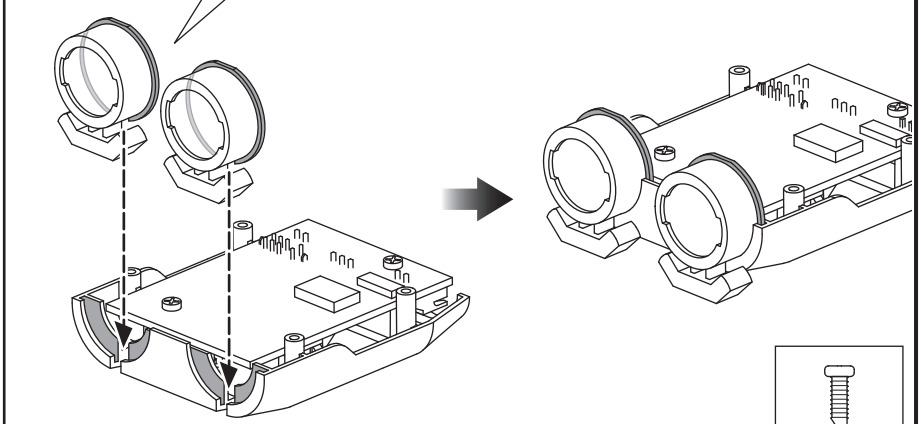

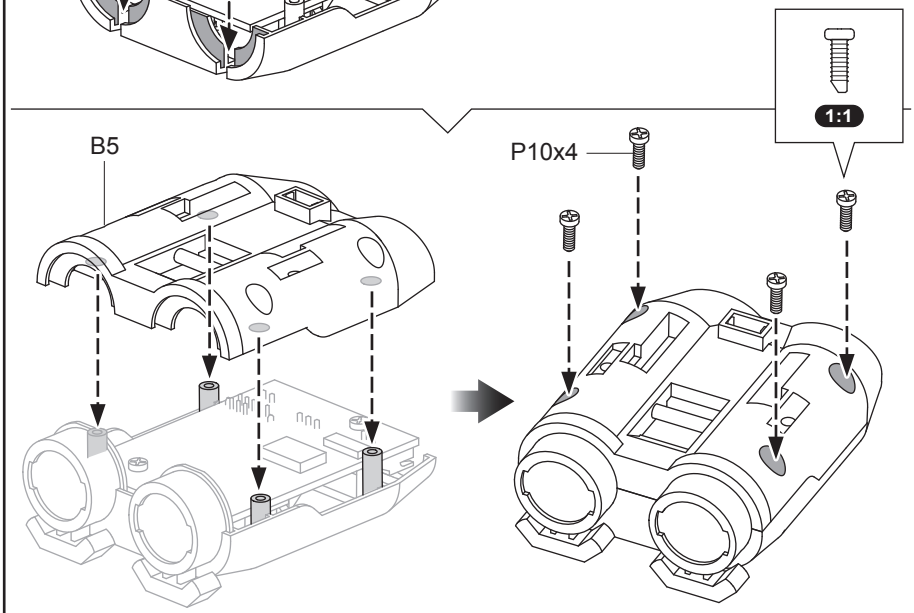

3

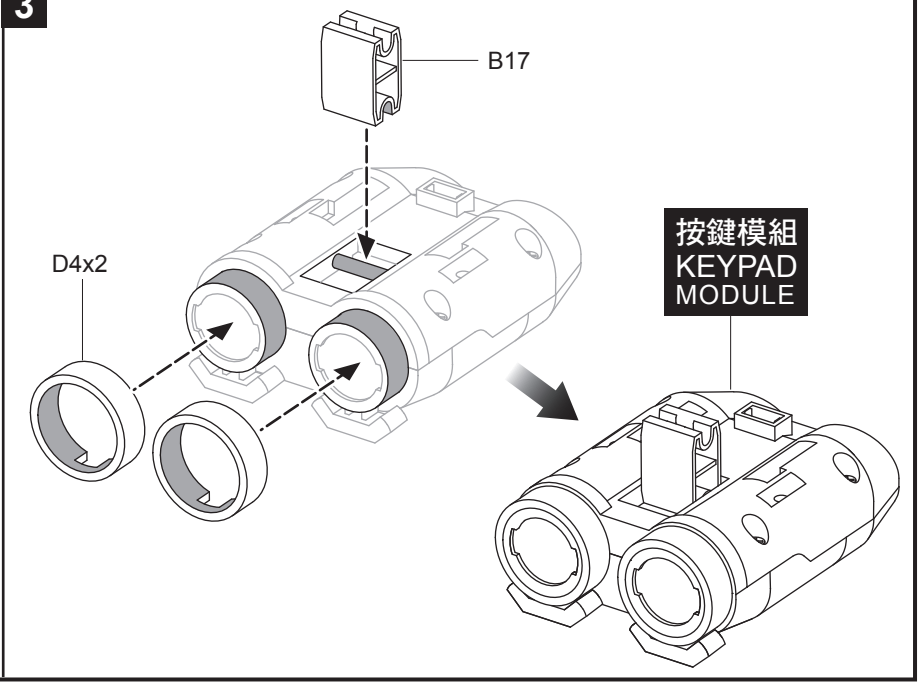

電池盒組裝 Battery Module Assembly

1

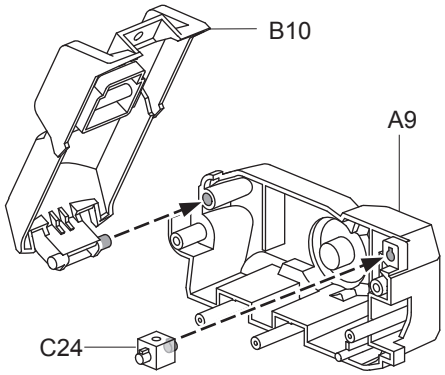

2

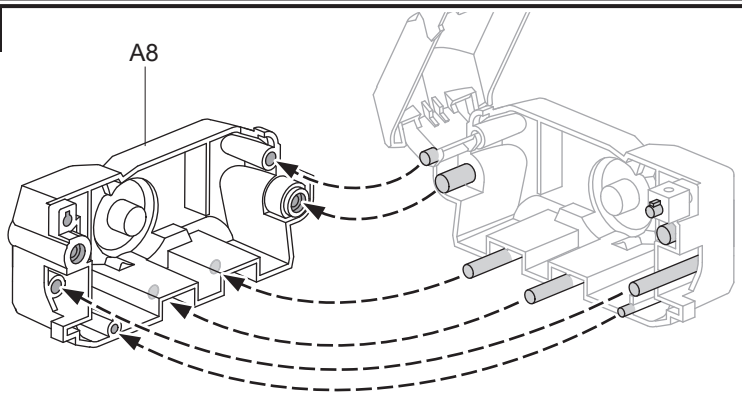

3

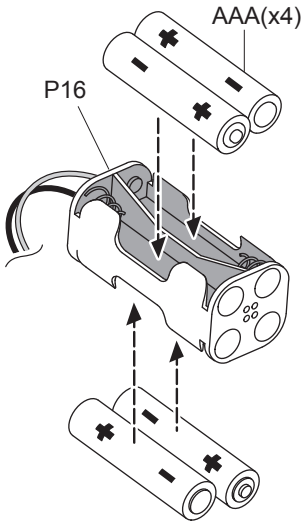

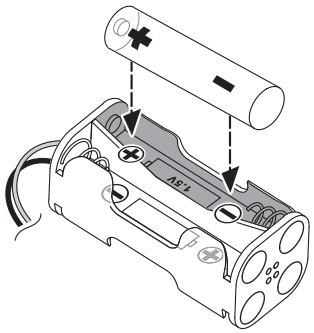

- **電池移除或更換應由成人或在成人監督下進行。**
  Installation, removal and replacement of batteries should be carried out by adults or under adults supervision.
- **請避免電池或電池連接器端子短路。**
  Avoid short circuiting the contacts in the battery compartment or the battery terminals.
- **請勿混用新舊電池及不同廠牌、種類的電池，以免造成危險或電器損耗。**
  Do not mix used batteries and new batteries or batteries of different types.
- **請勿混合鹼性、碳鋅電池或充電電池使用。**
  Do not mix alkaline, standard (carbon-zinc), or rechargeable (nickel-cadmium) batteries.
- **電池放入前請先確認正確正負極性方向。**
  Batteries are to be inserted with the correct polarity.
- **請勿試圖對非充電電池進行充電。**
  Do not attempt to recharge non-rechargeable batteries.
- **充電前請將充電電池自玩具中取出。**
  Remove exhausted batteries from the product to avoid leakage.

4

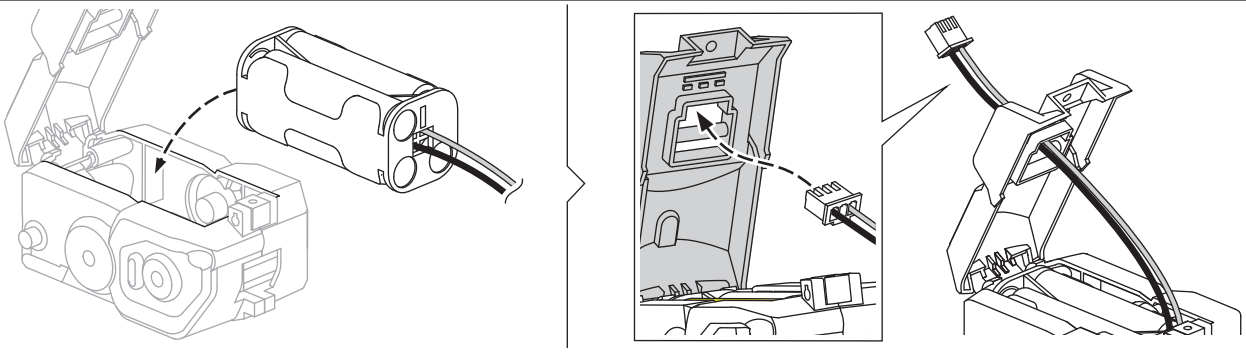

5

! **在組裝過程中如有任何困難，請父母偕同幫忙**
Please ask for parents assistance if any problem during assembly.

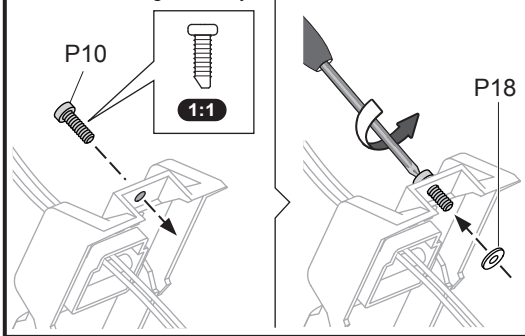

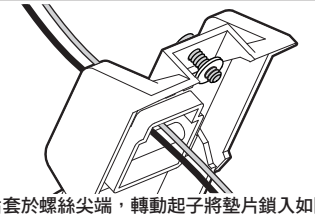

請先將墊片套於螺絲尖端，轉動起子將墊片鎖入如圖所示之大約位置即可
Place the washer on the tip of the screw, and then screw in directly.

6

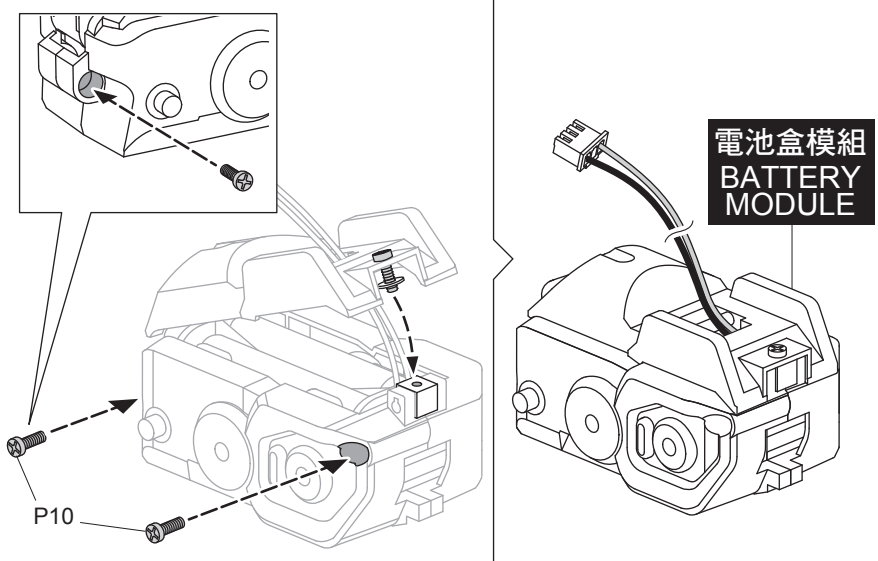

狙擊槍組裝 Shooting Module Assembly

1

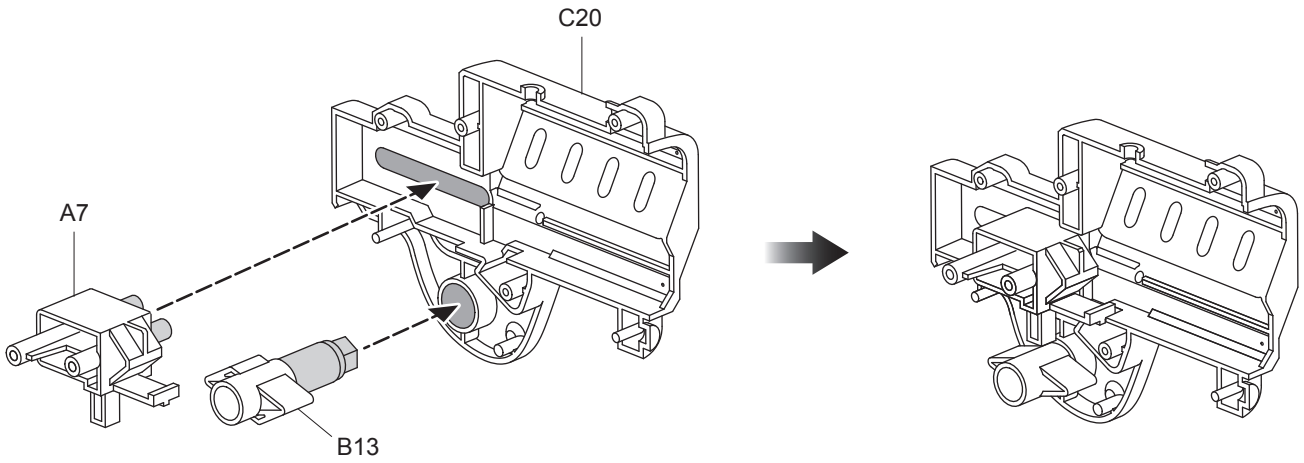

2

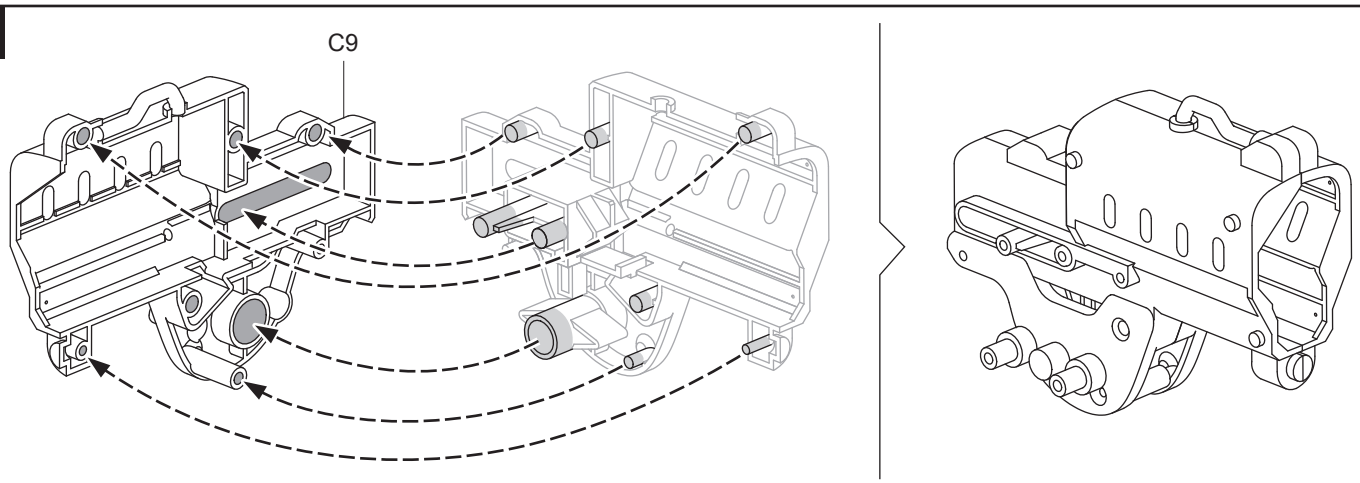

3

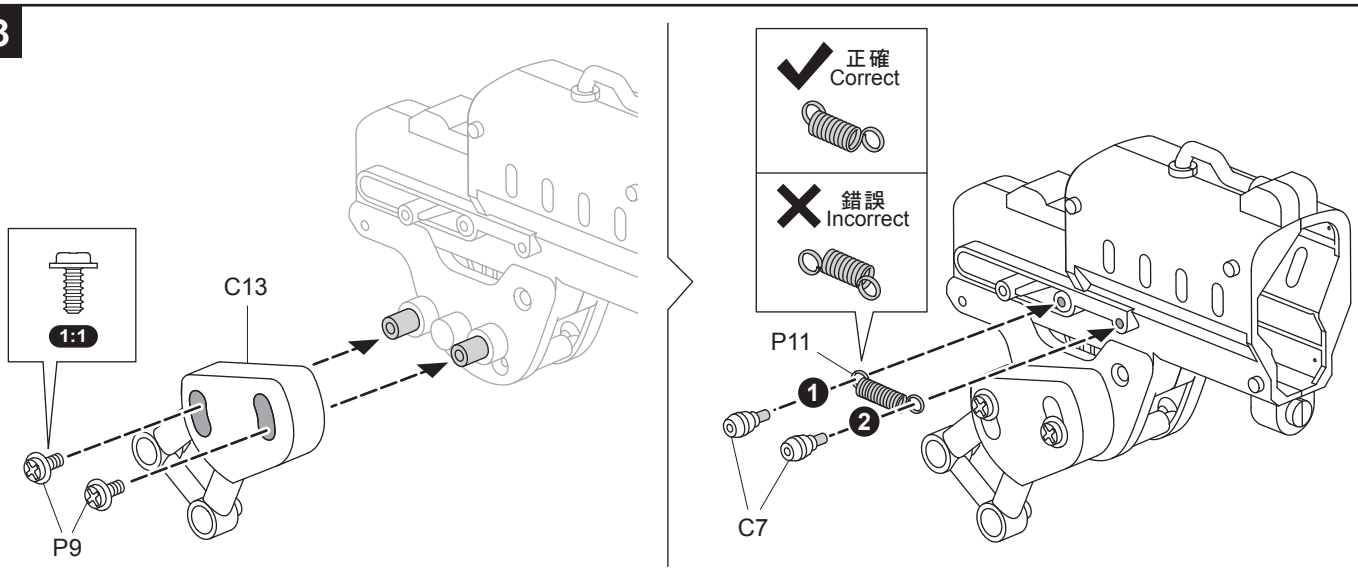

4

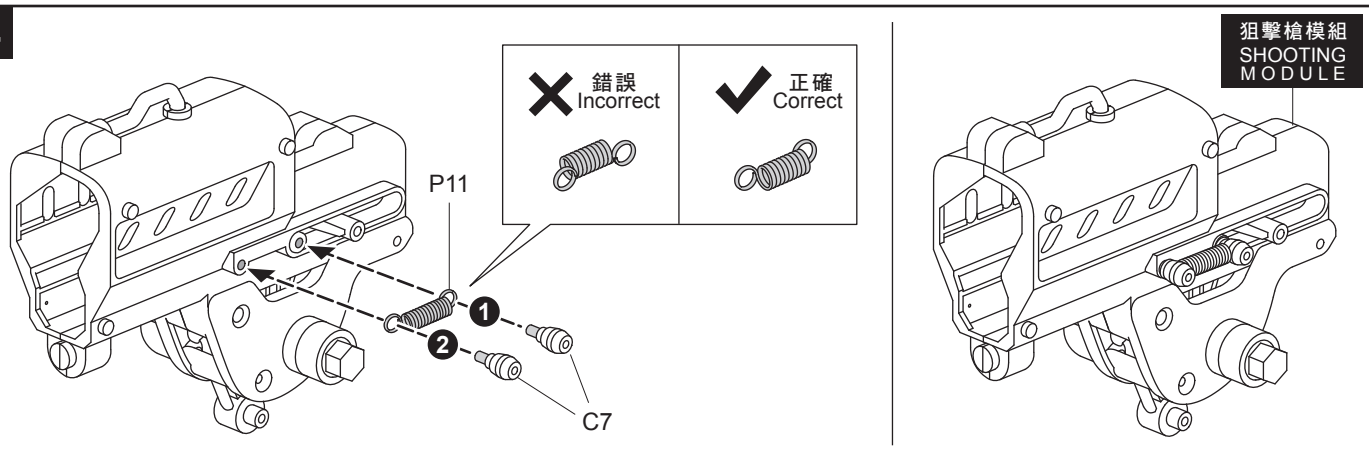

全向輪組裝 Omni Wheel Module Assembly

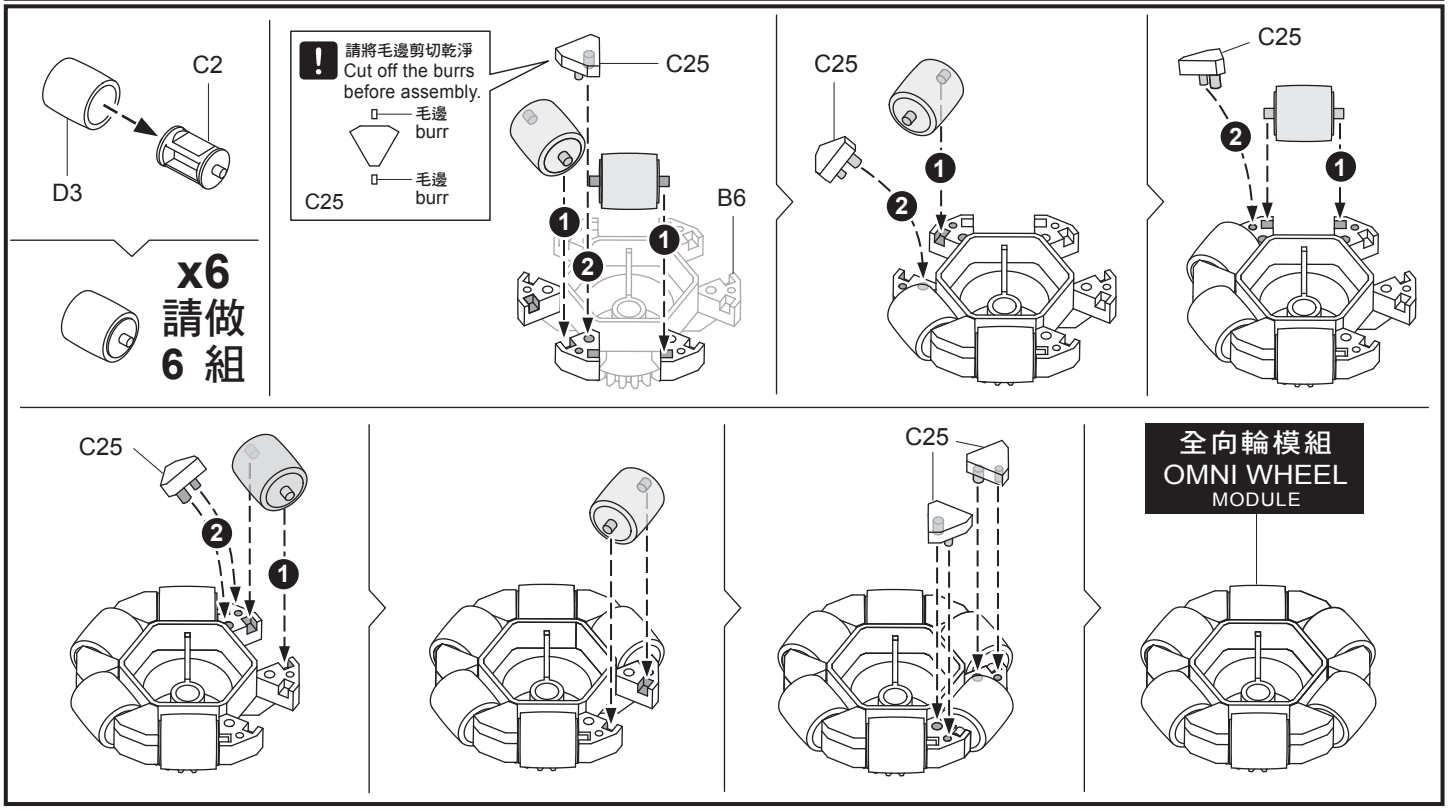

掃帚組裝 Broom Module (Left & Right) Assembly

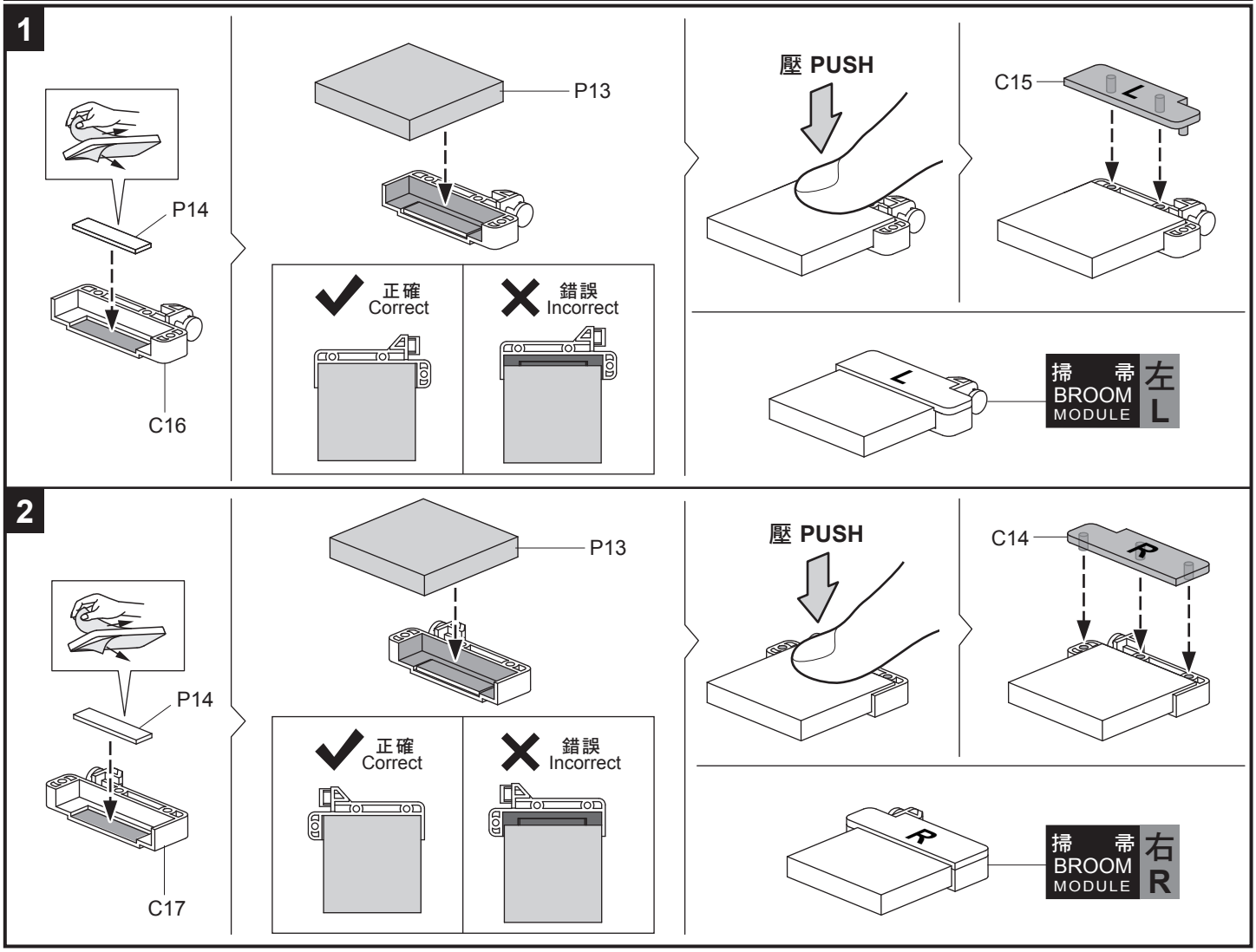

後輪組裝 Rear Wheel Module Assembly

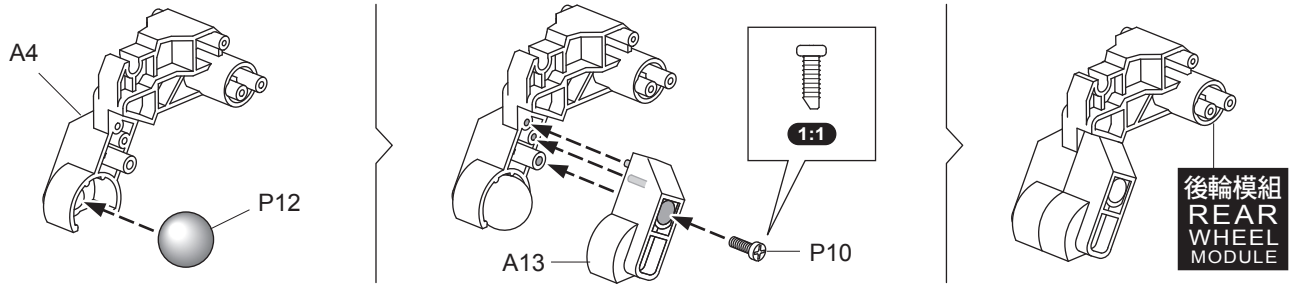

輪胎組裝 Wheels Module (A & B) Assembly

1 請將毛邊剪切乾淨 Cut off the burrs before assembly

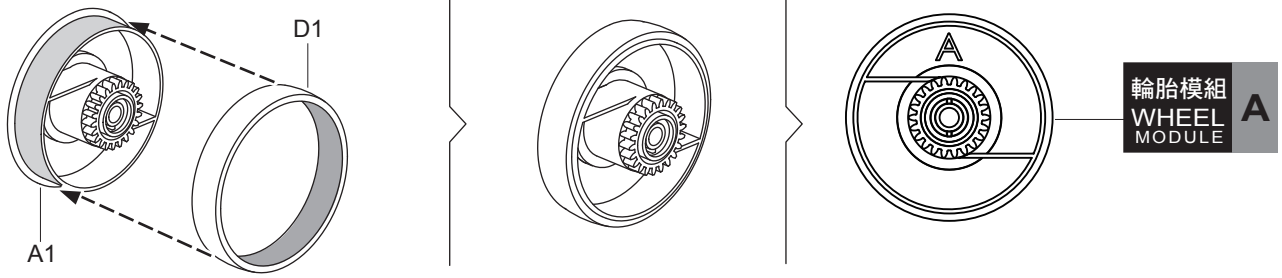

2 請將毛邊剪切乾淨 Cut off the burrs before assembly

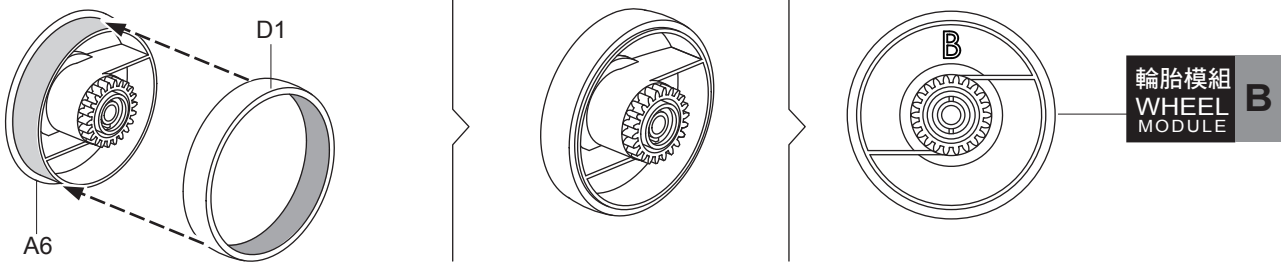

飛鏢組裝 Dart Module Assembly

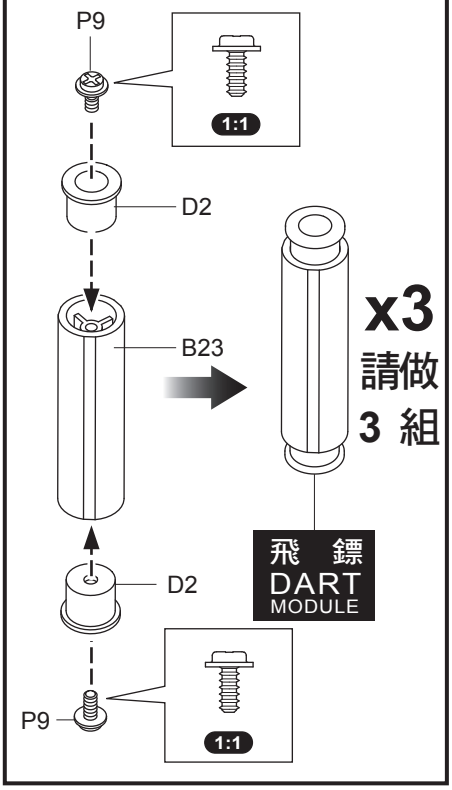

支架組裝 Bracket Module Assembly

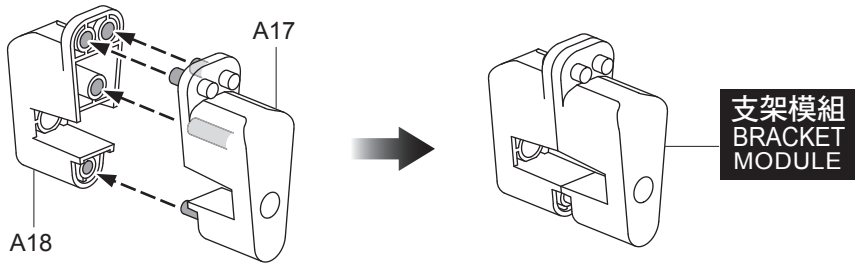

齒輪組裝(A&B) Gears Module (A & B) Assembly

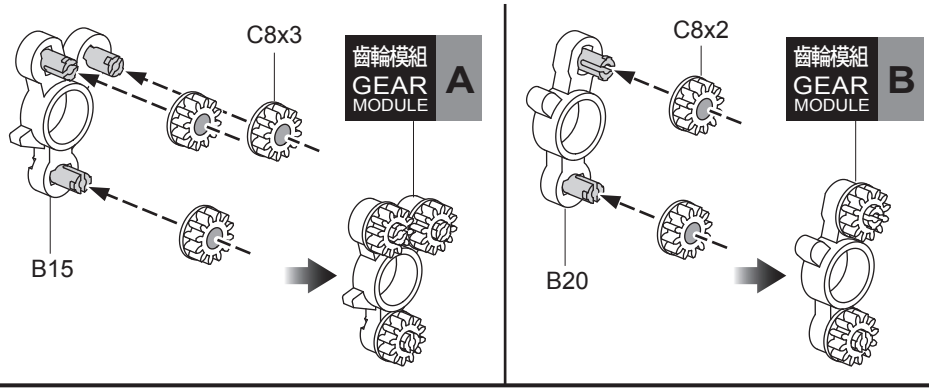

創意小畫家組裝 Doodler Assembly

1

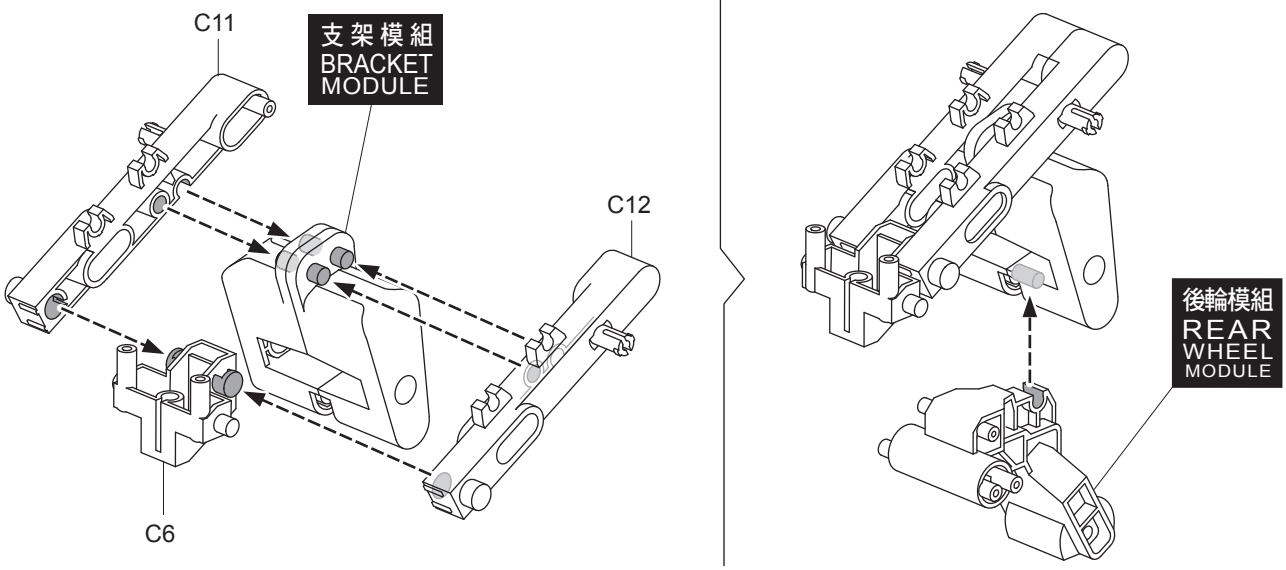

2

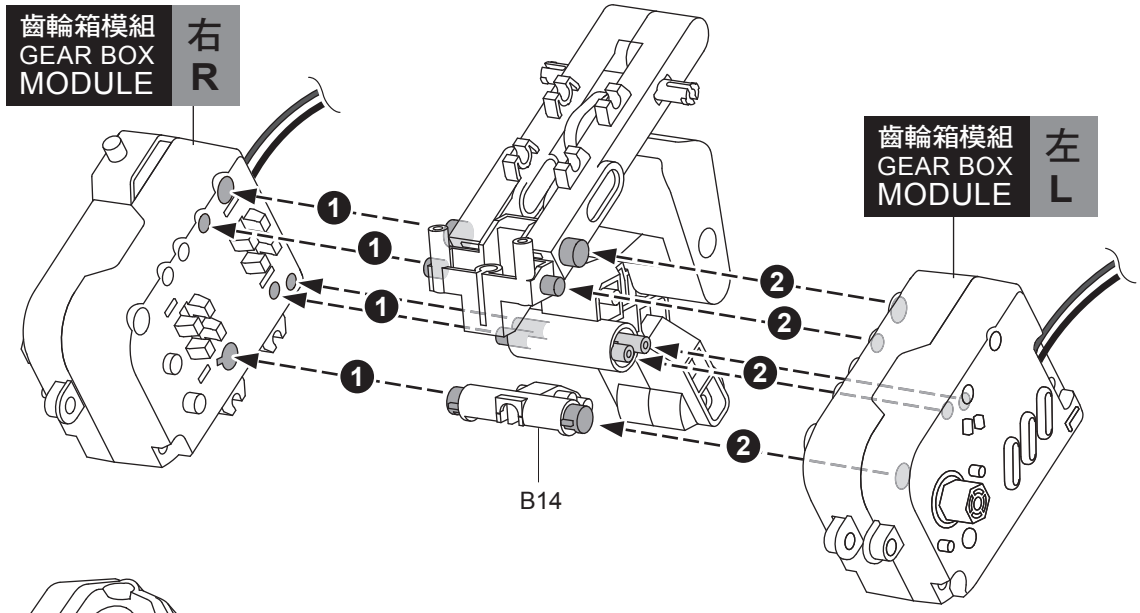

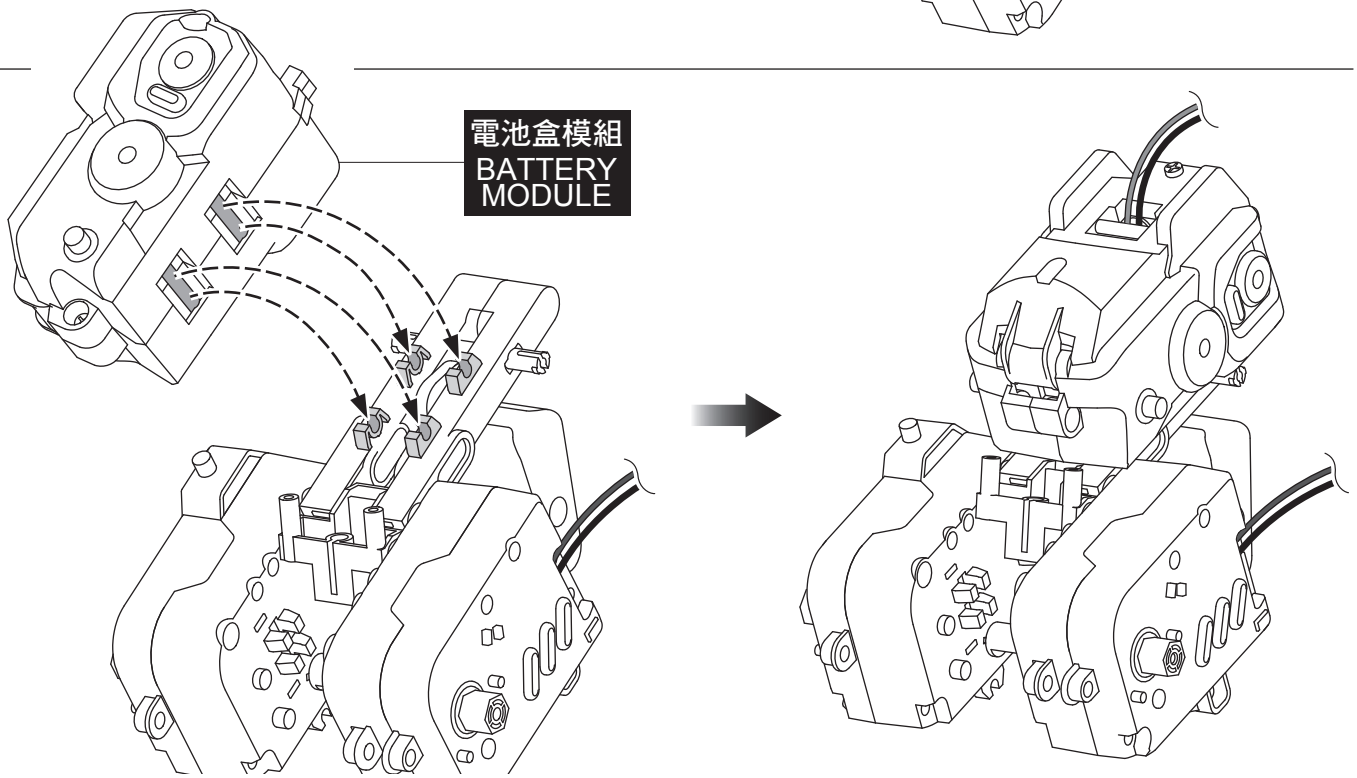

3

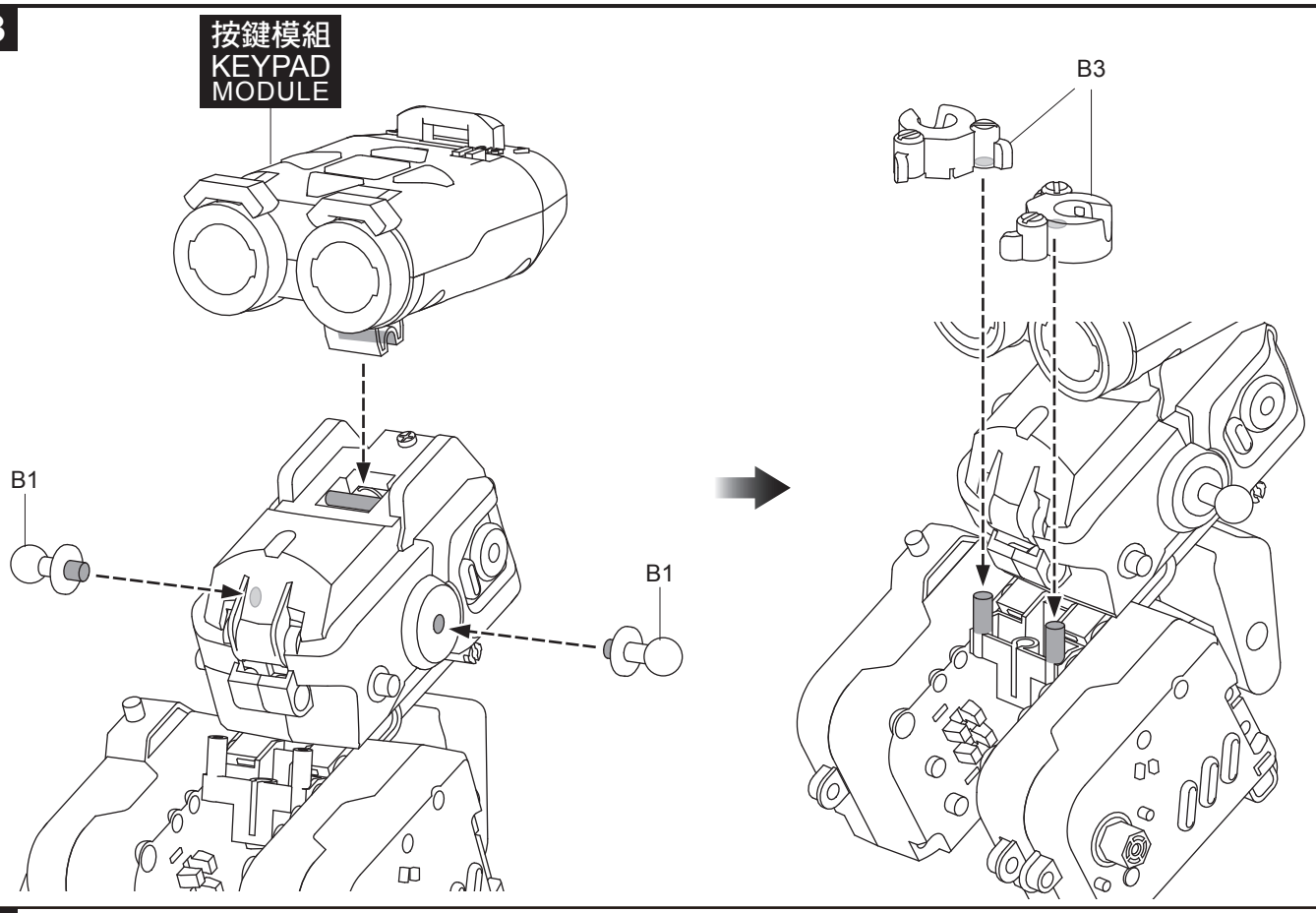
按鍵模組
KEYPAD
MODULE
B3
B1
B1

4

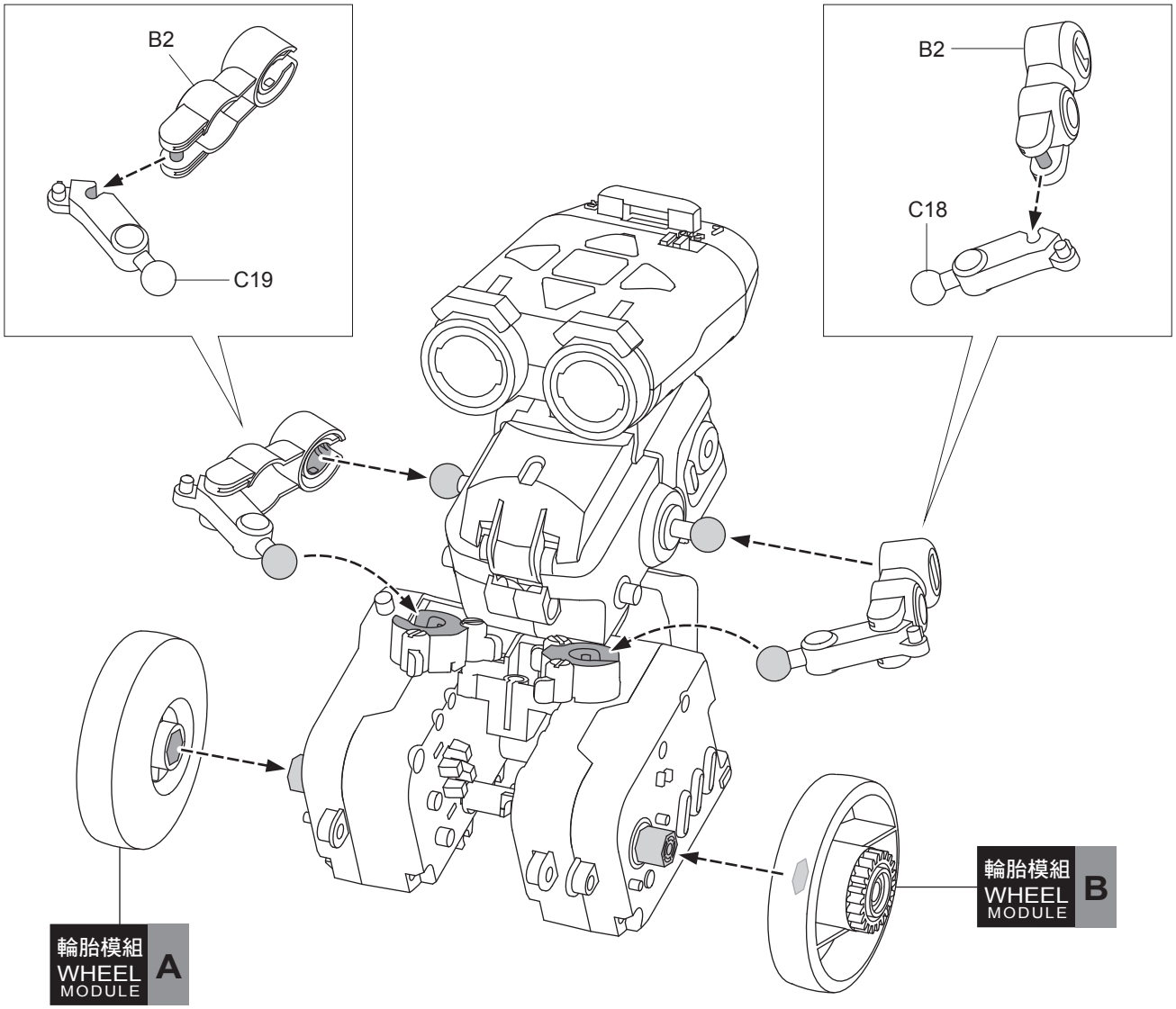
B2
C19
B2
C18
輪胎模組
WHEEL
MODULE
A
輪胎模組
WHEEL
MODULE
B

5

切換到模式"0"
Switch to Mode " 0 "
as shown.

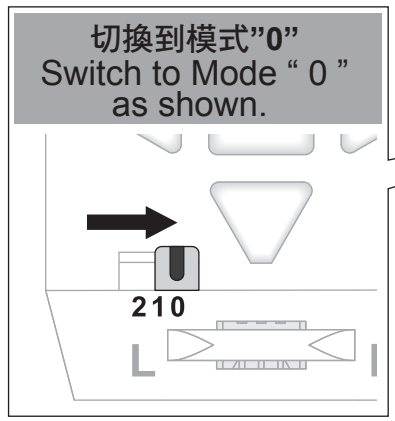

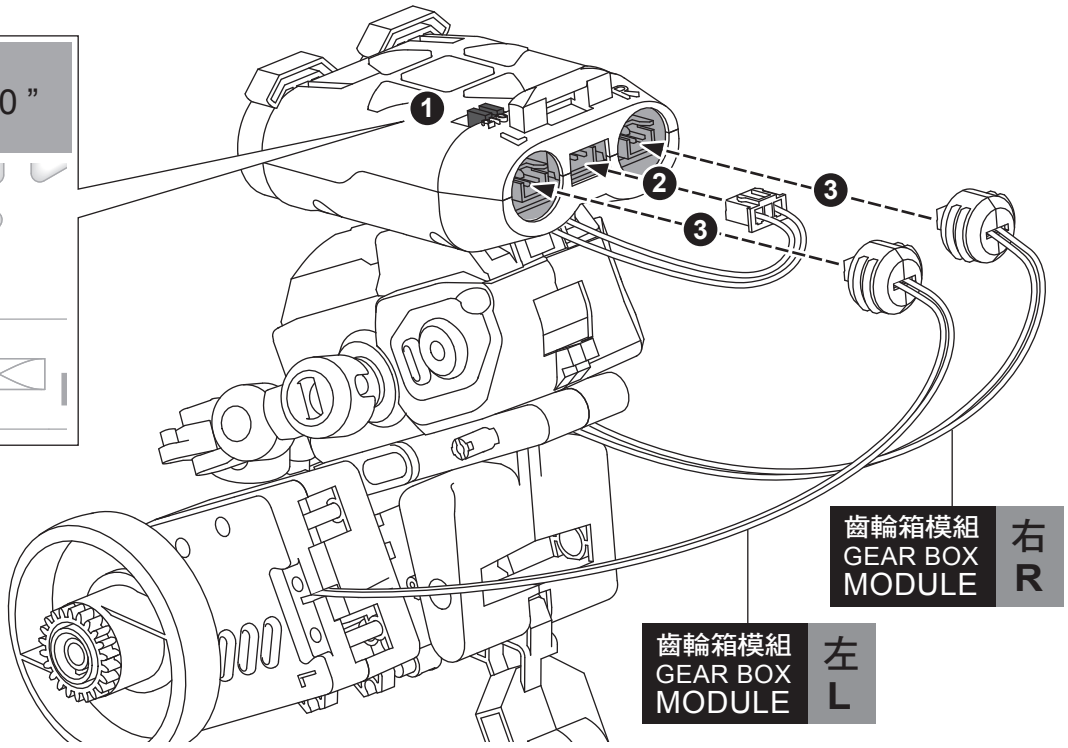

6

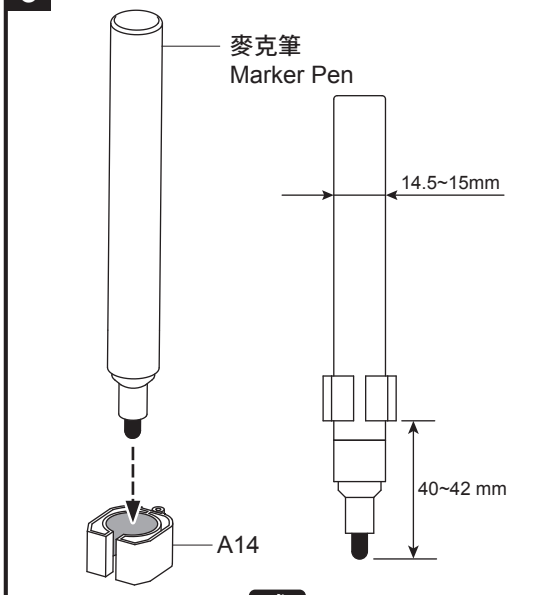

或
OR

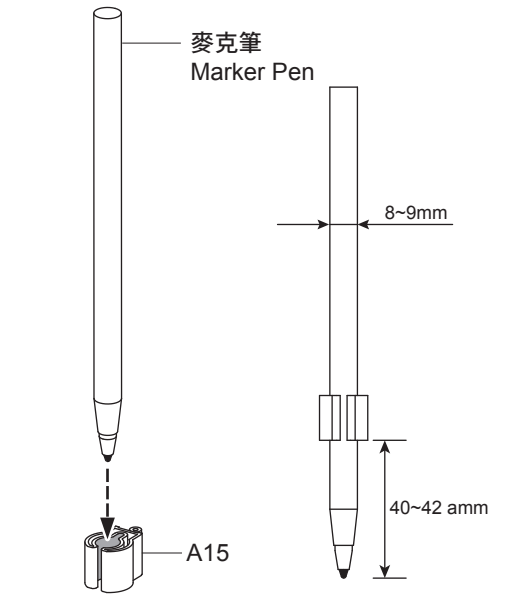

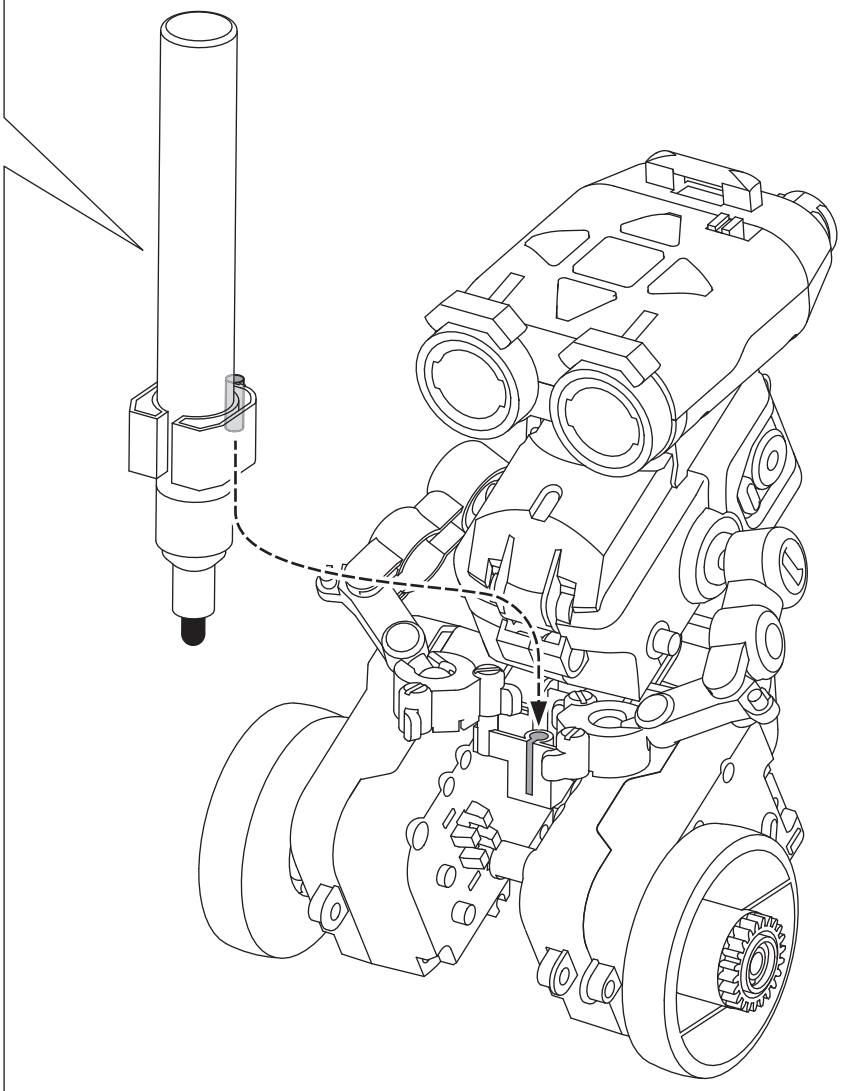

範　　例
Example

請依照實際狀況編程，以下範例僅供參考
Please revise the codes according to the actual performance of the robot.
Below examples are just for references.

範例 01 Example 01

切 換 至 模 式 1
Switch to Mode 1

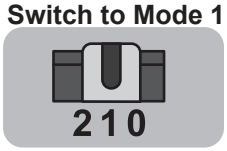

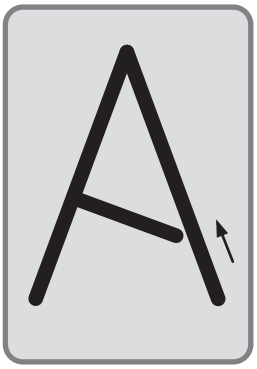

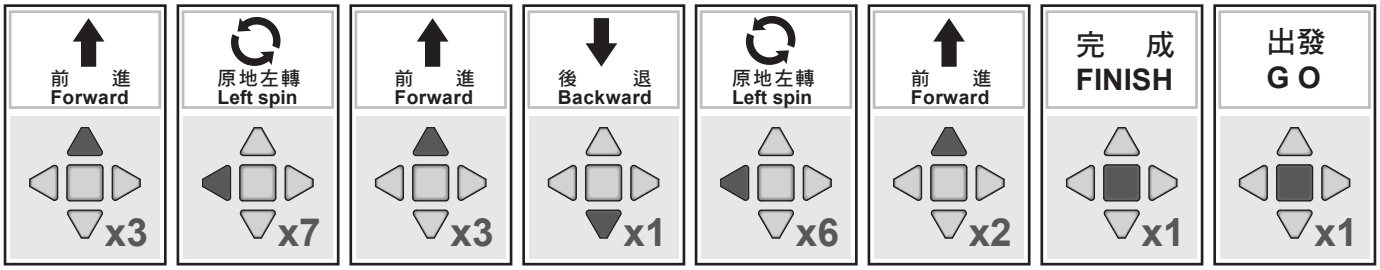

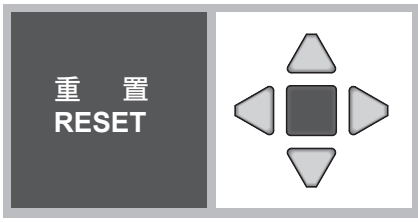

長按中央鍵3秒以重置系統開始新的編程
Long-press the central button for 3 seconds to code a new program.

範例 02 Example 02

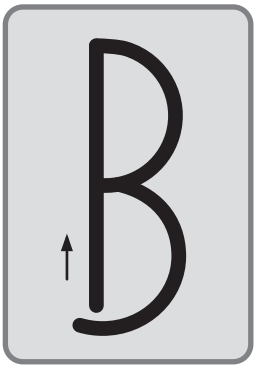

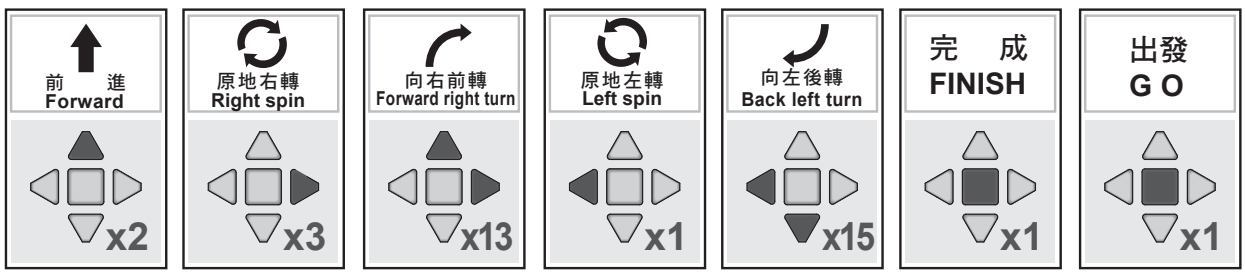

掃地機器人組裝 Sweeper Assembly

1

齒輪箱模組 GEAR BOX MODULE 左 L

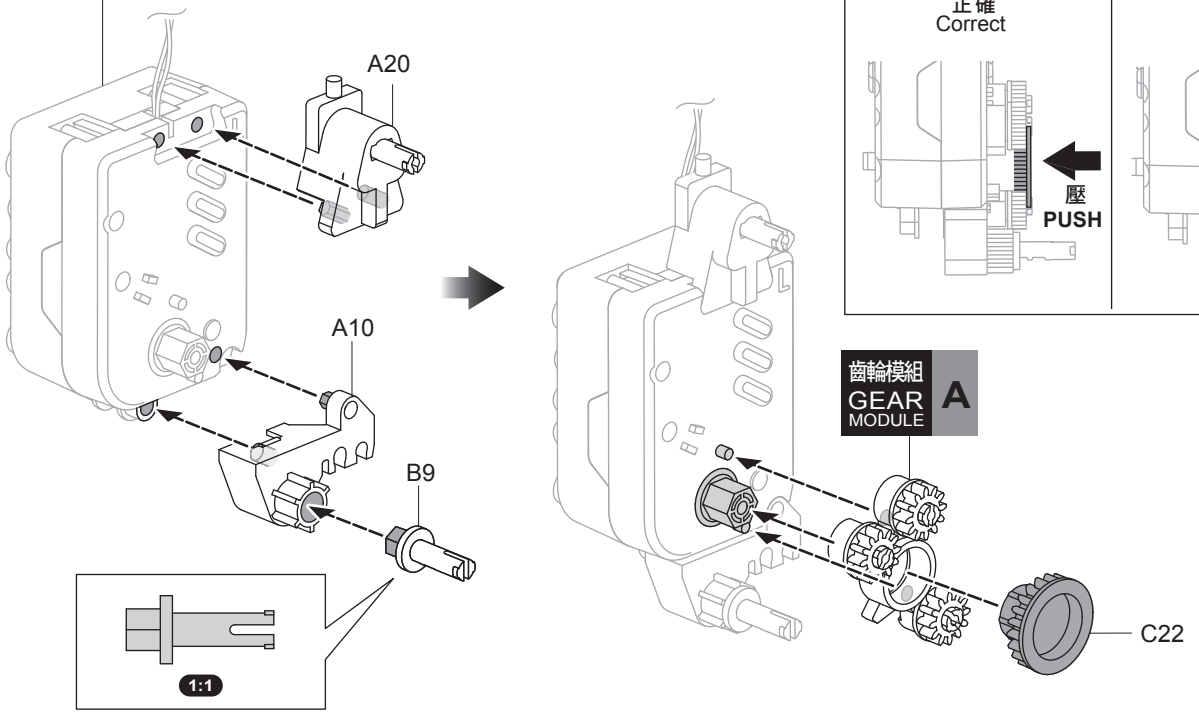

2

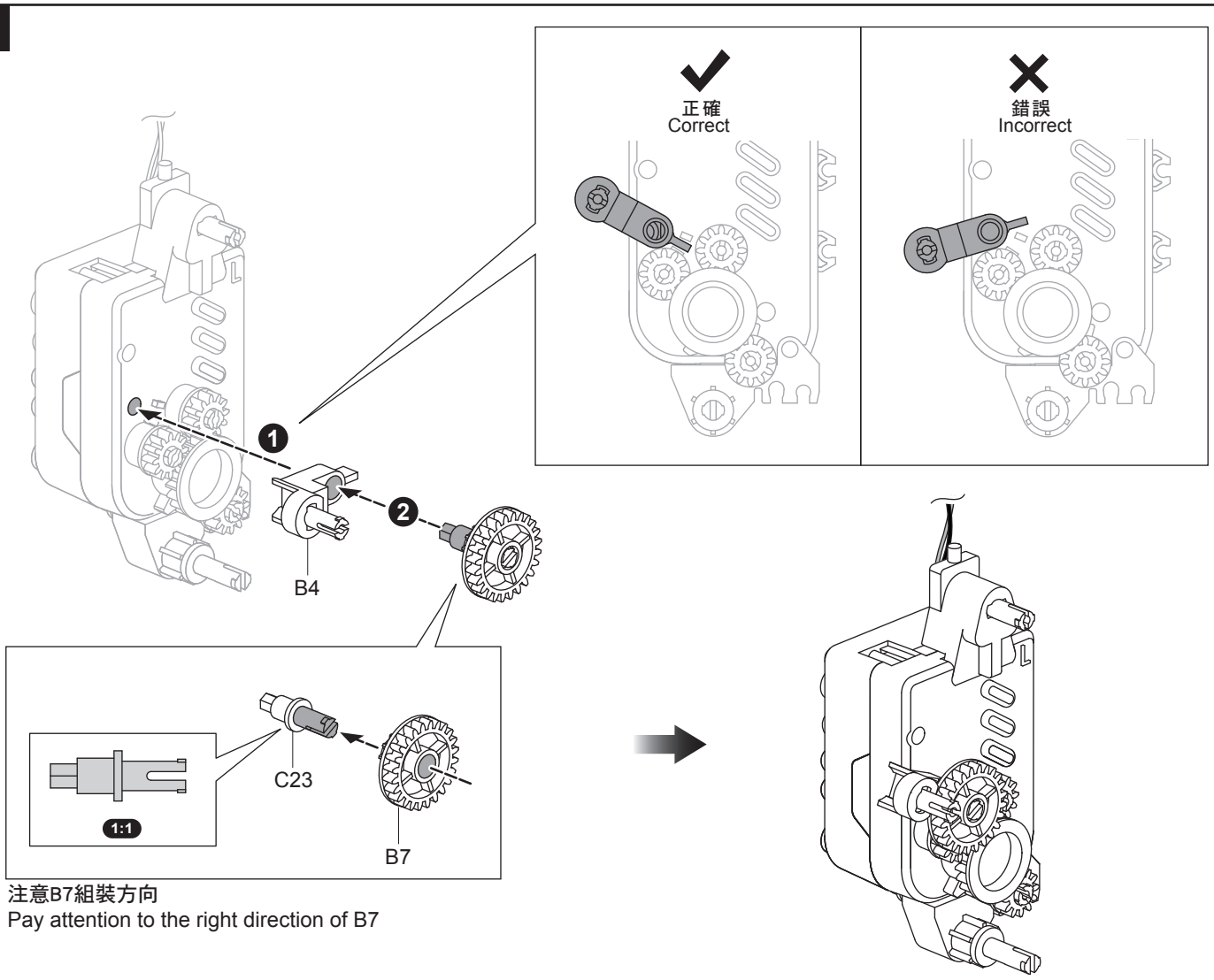

注意B7組裝方向
Pay attention to the right direction of B7

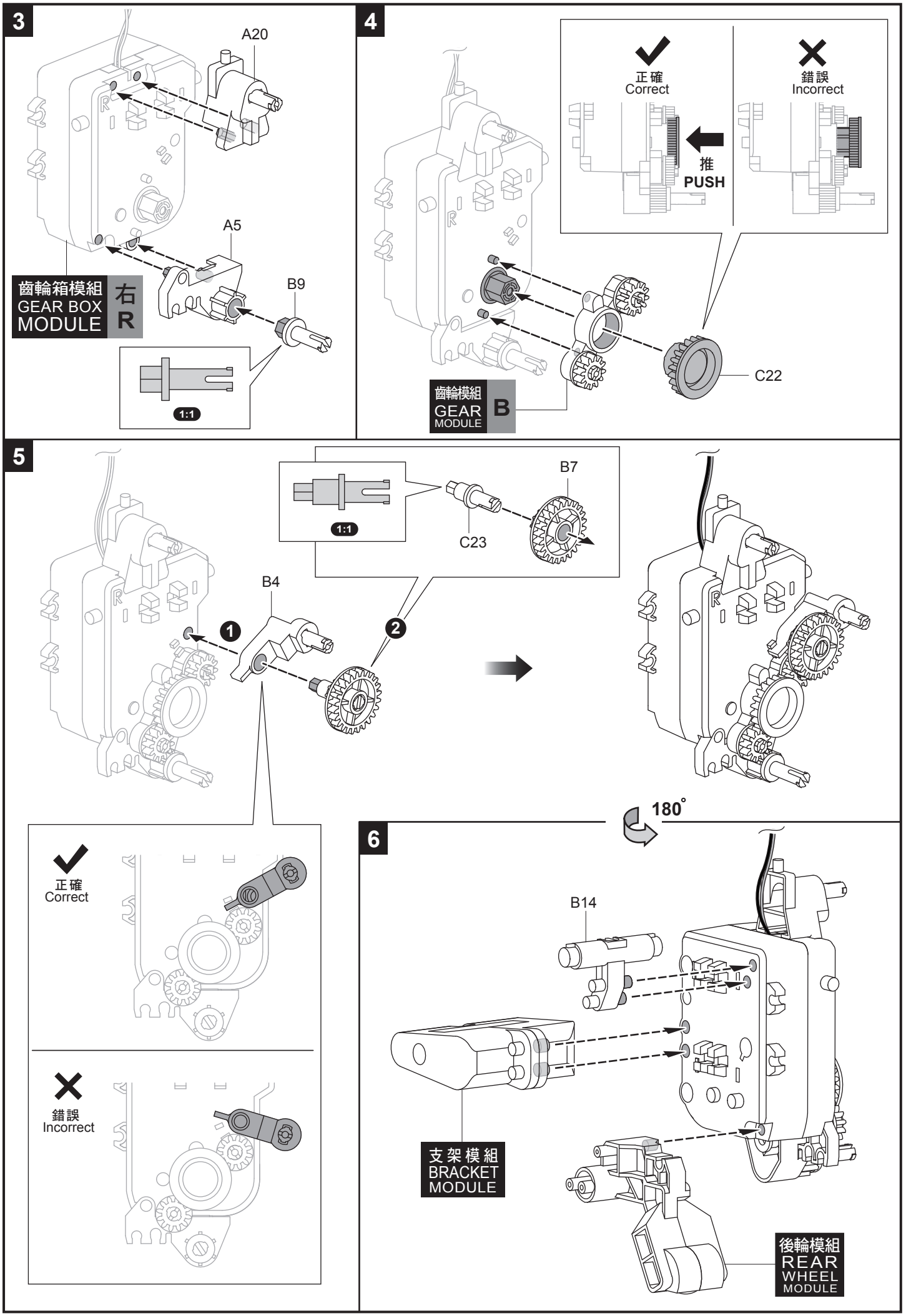
3
A20
A5
B9
齒輪箱模組
GEAR BOX
MODULE
右
R
1:1
4
正確
Correct
錯誤
Incorrect
推
PUSH
C22
齒輪模組
GEAR
MODULE
B
5
B7
C23
1:1
B4
1
2
正確
Correct
錯誤
Incorrect
180°
6
B14
支架模組
BRACKET
MODULE
後輪模組
REAR
WHEEL
MODULE

7

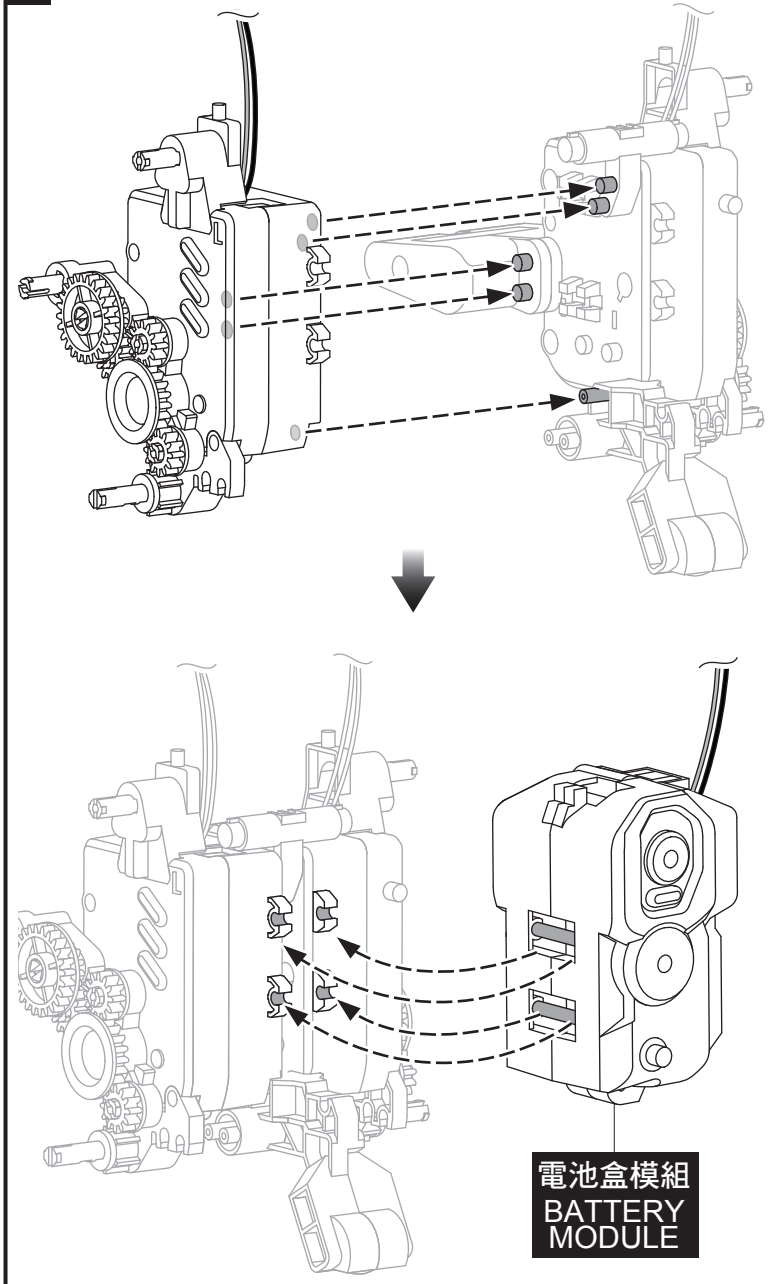

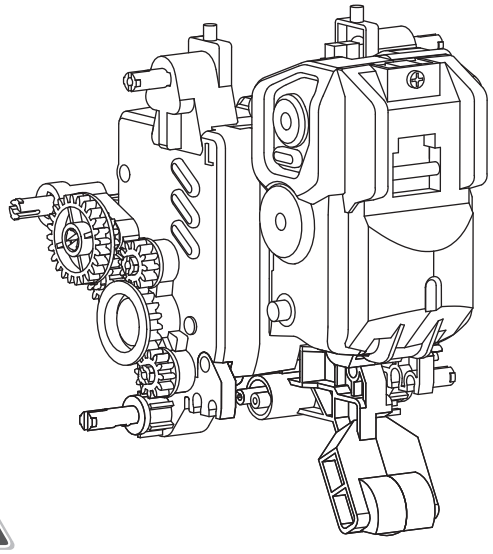

8

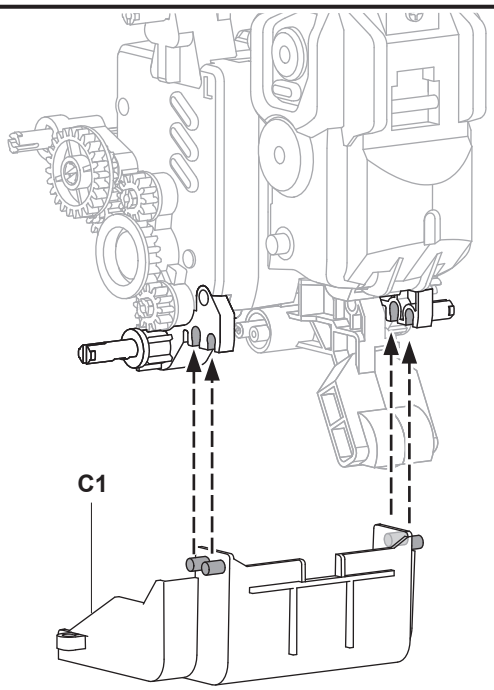

9

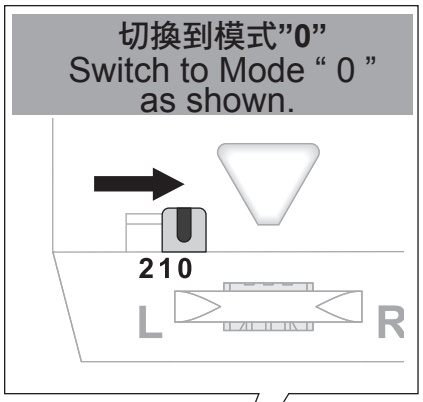

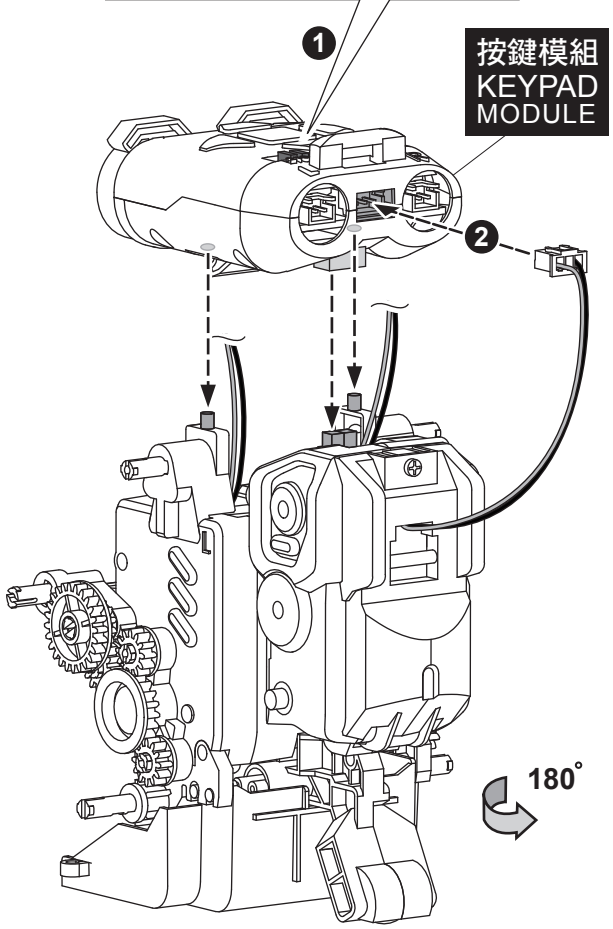

請確認步驟6和7的零件皆組裝確實，以免掃地機器人運作不順暢

Please note all the parts stated in step 6 & 7 need to be assembled firmly, or the sweeper may not perform normally.

10

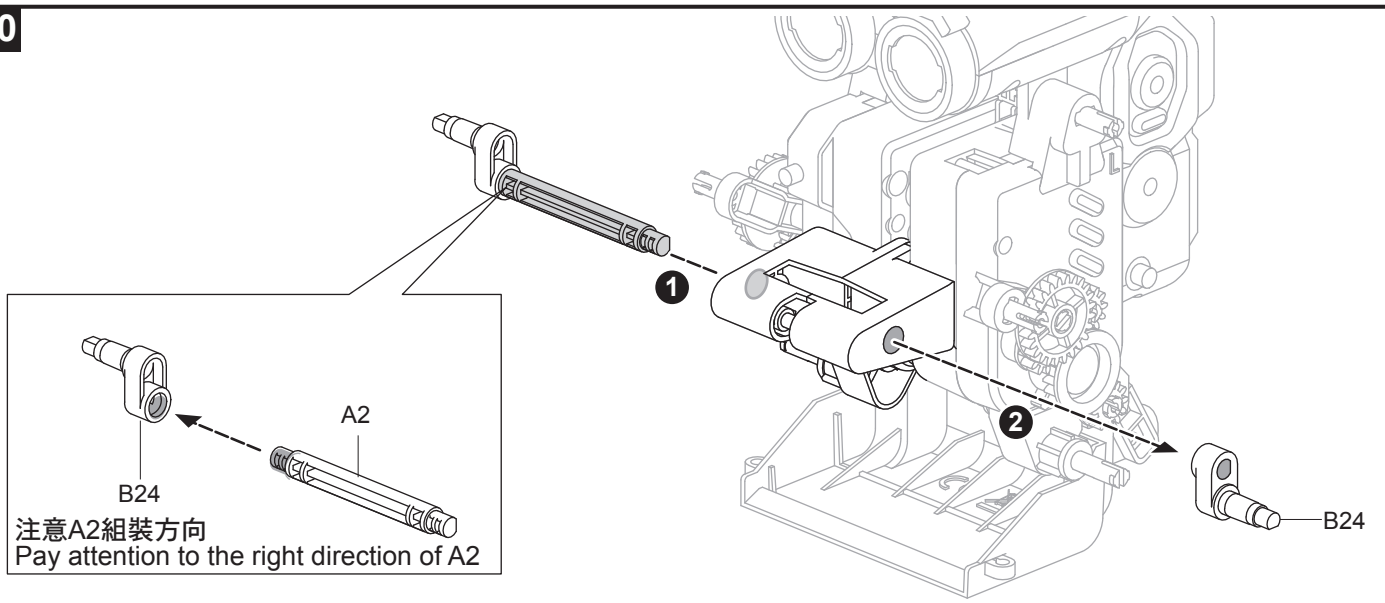
A2
B24
注意A2組裝方向
Pay attention to the right direction of A2
1
2
B24

11

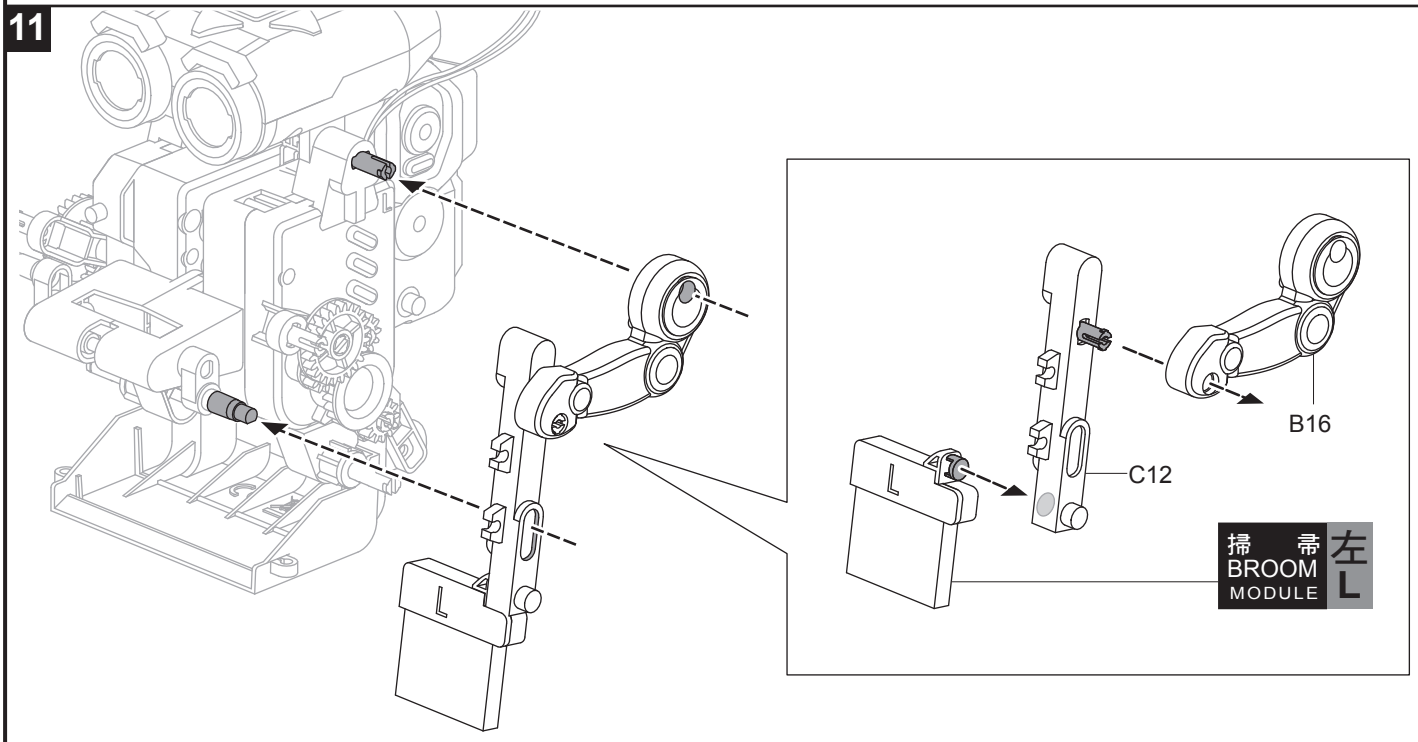
B16
C12
L
掃 帚
BROOM
MODULE
左
L

12

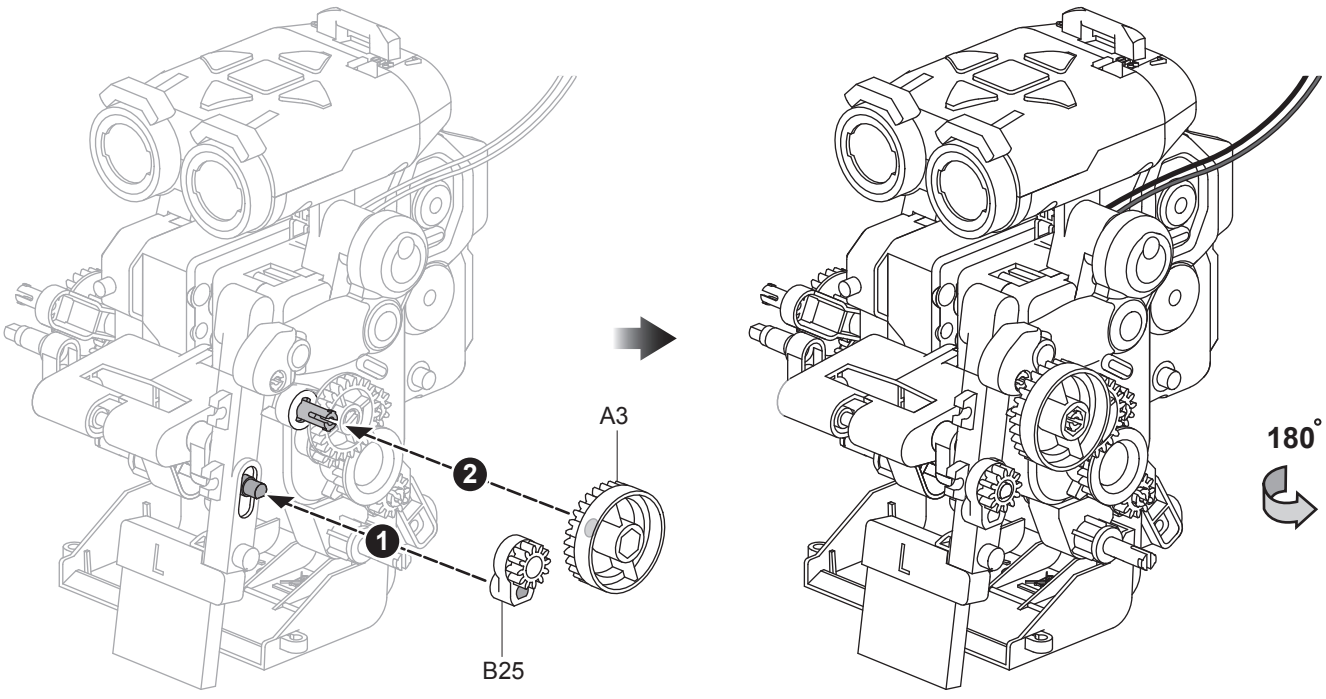
A3
B25
1
2
180°

13

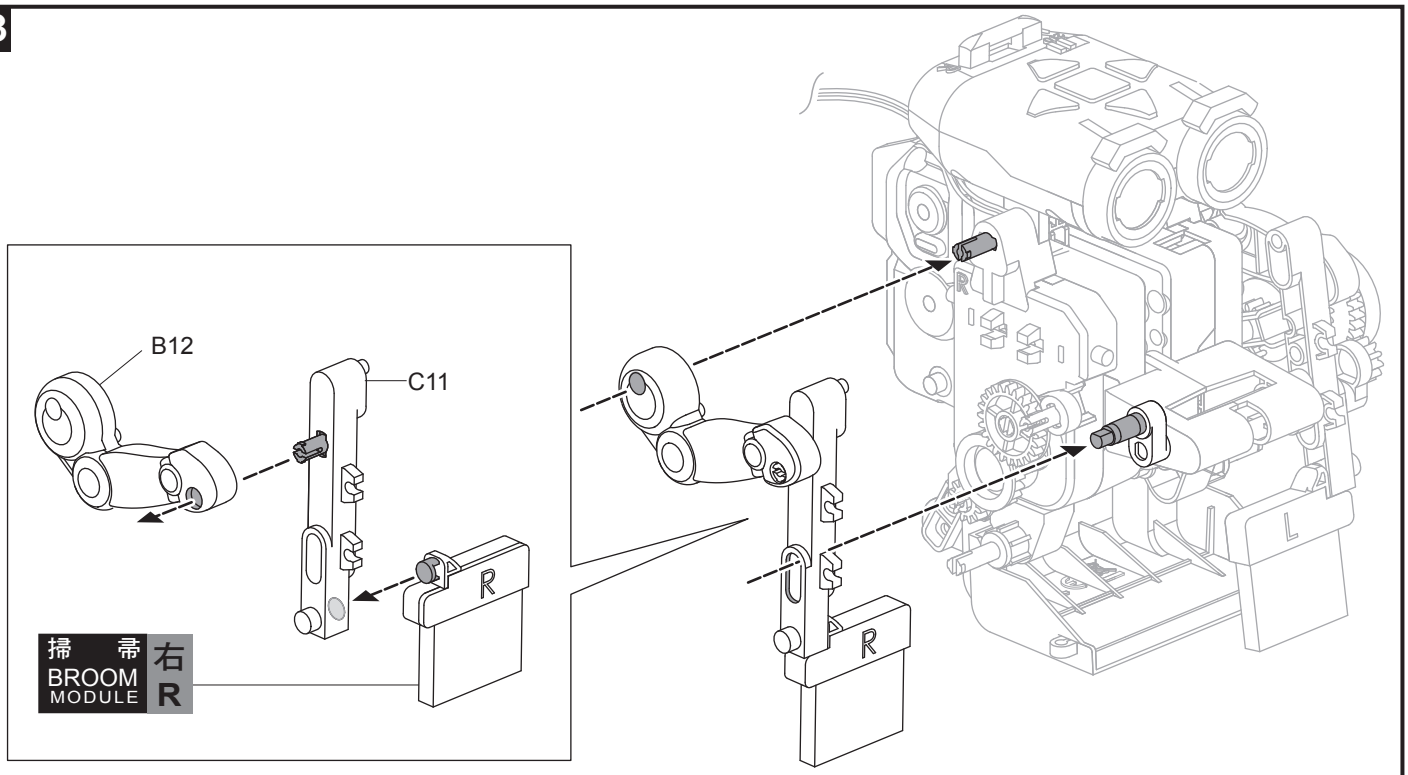
B12
C11
R
掃 帚
BROOM
MODULE
右
R
R
R
L

14

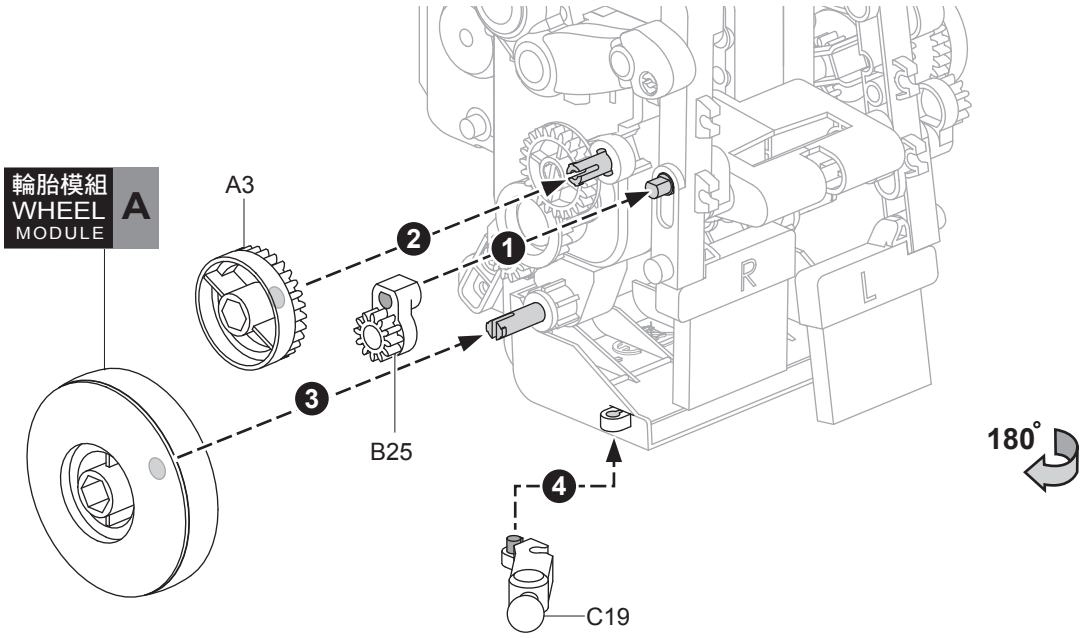
輪胎模組
WHEEL
MODULE
A
A3
2
1
3
B25
R
L
180°
4
C19

15

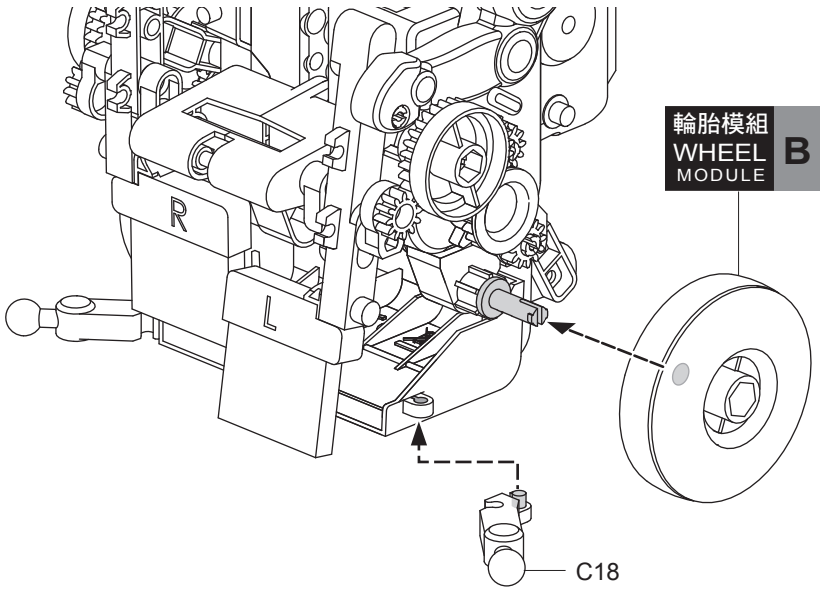
R
L
輪胎模組
WHEEL
MODULE
B
C18

16

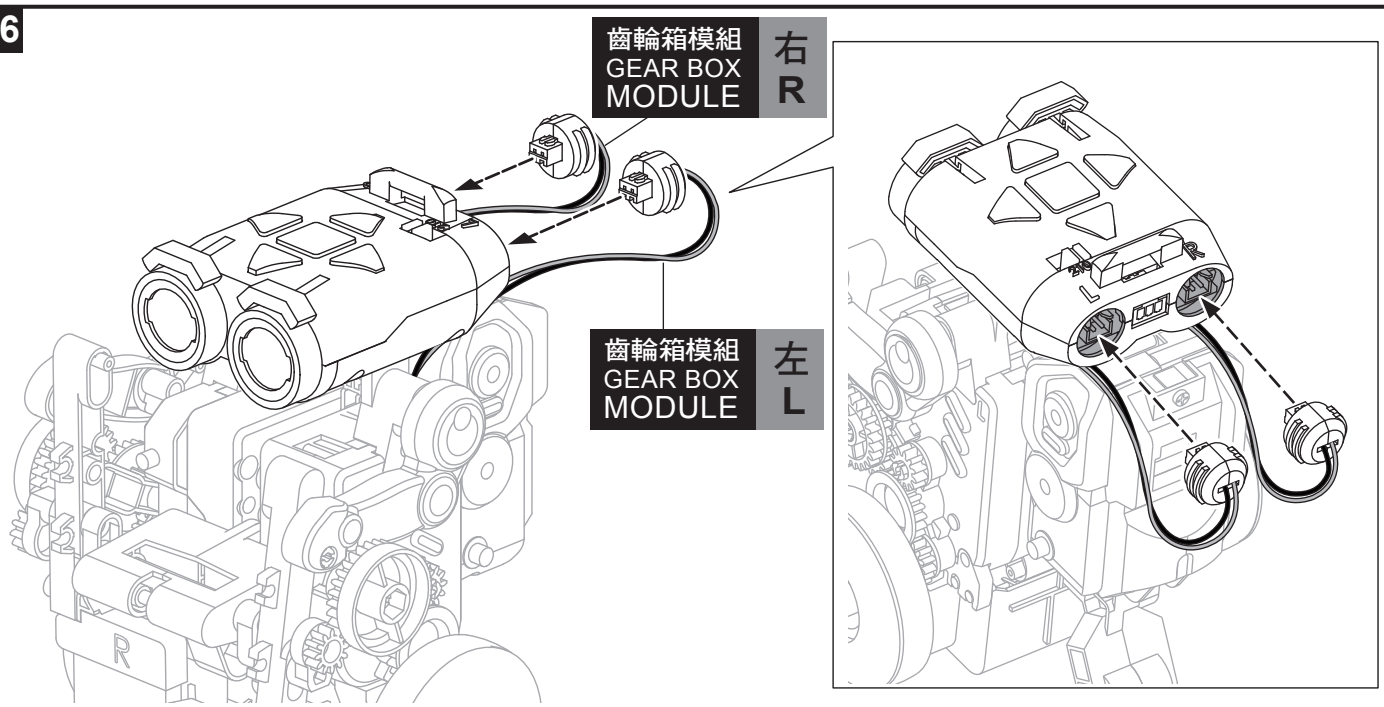

17

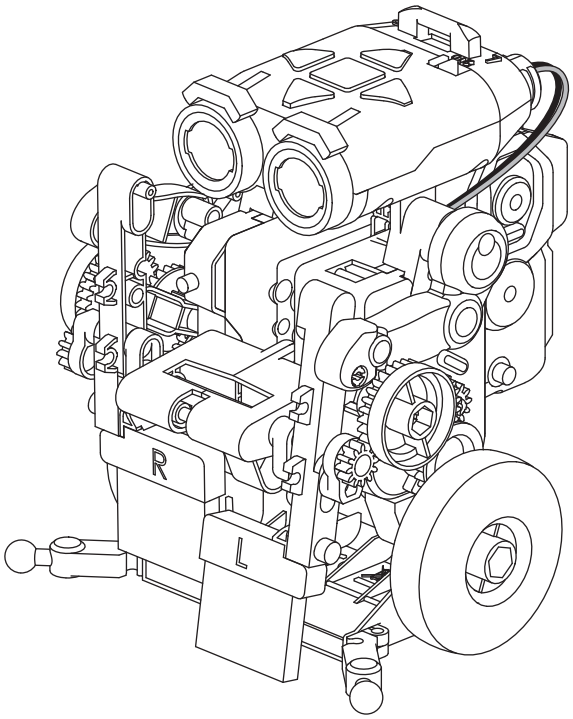

轉動機器人眉毛以做出不同的表情
You could rotate the eyebrows to create different looks.

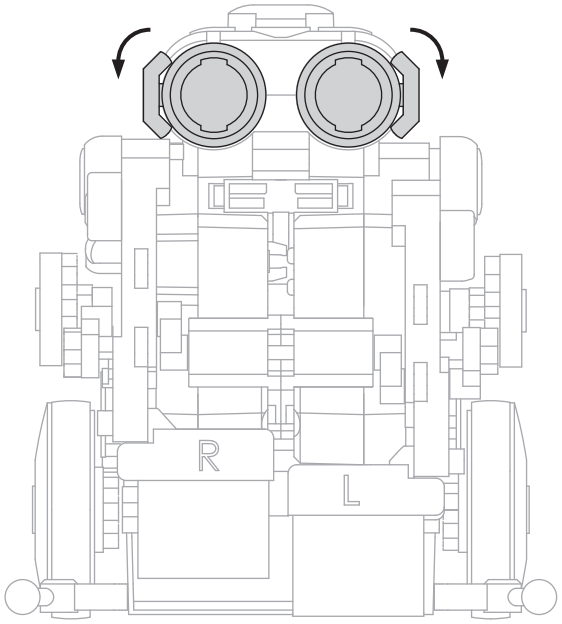

範　例 Example

請依照實際狀況編程，以下範例僅供參考
Please revise the codes according to the actual performance of the robot.
Below examples are just for references.

切 換 至 模 式 1
Switch to Mode 1

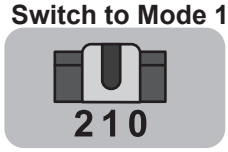

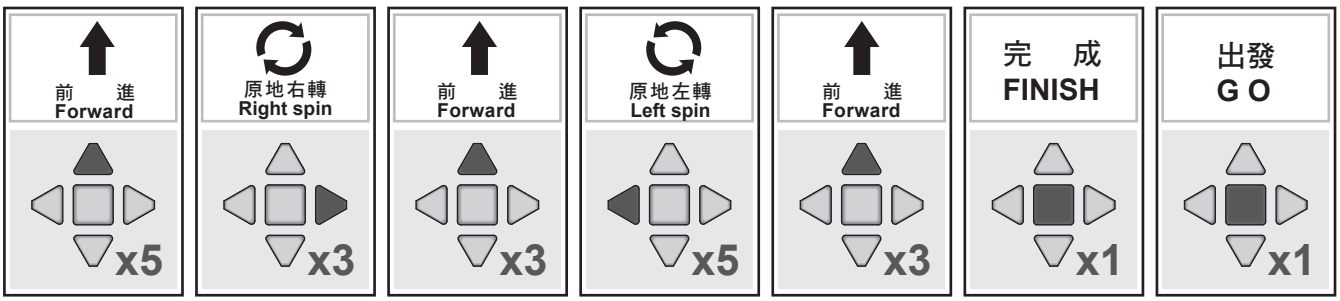

狙擊神射手組裝 Shooter Assembly

1

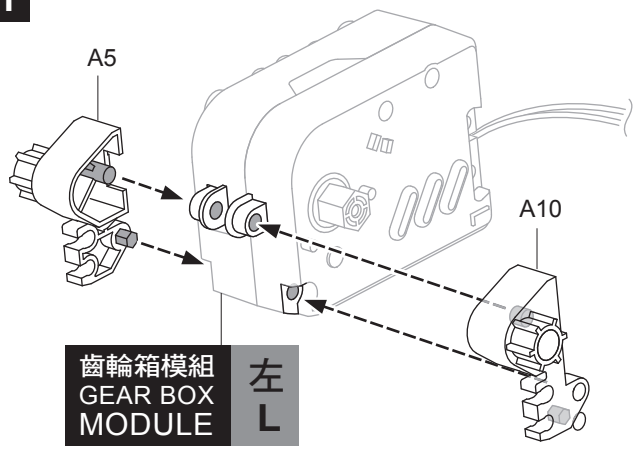

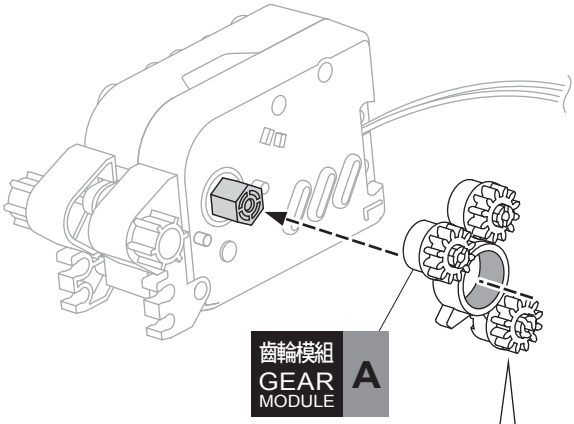

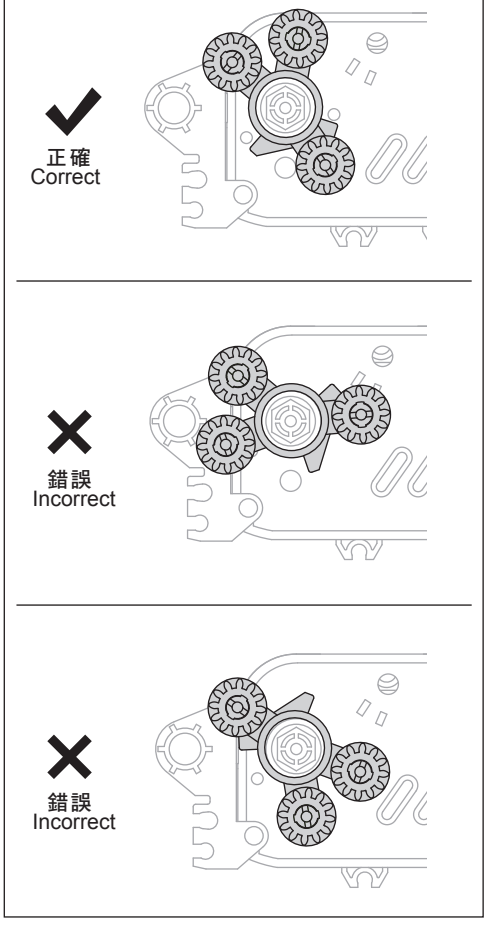

2

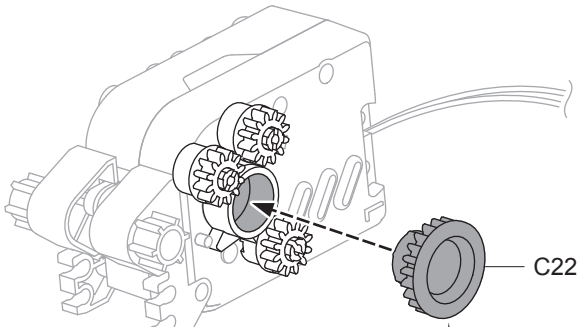

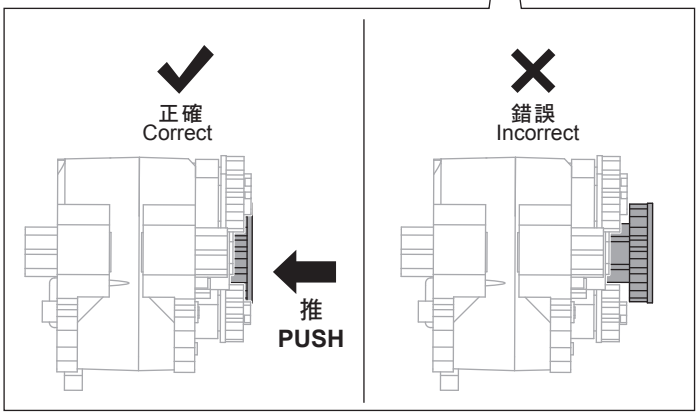

3

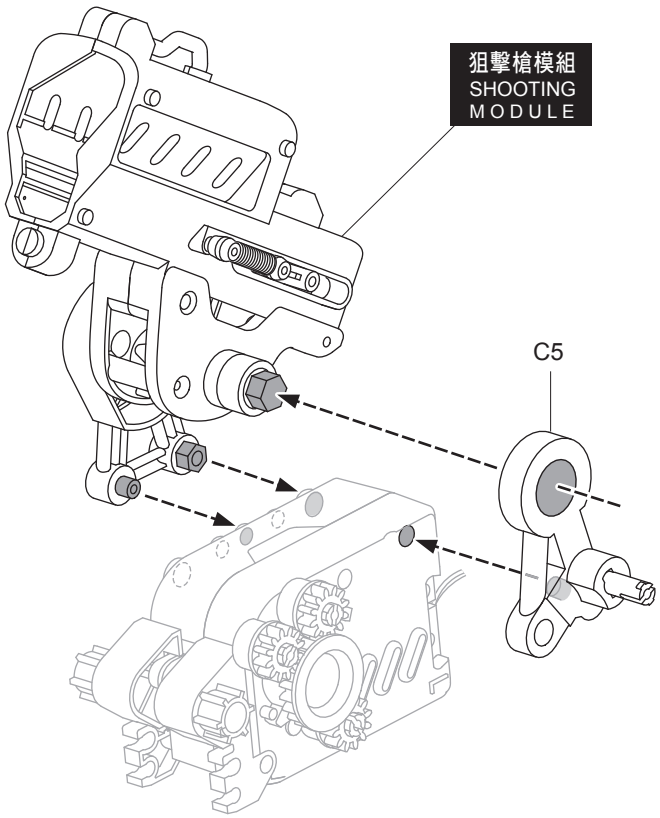

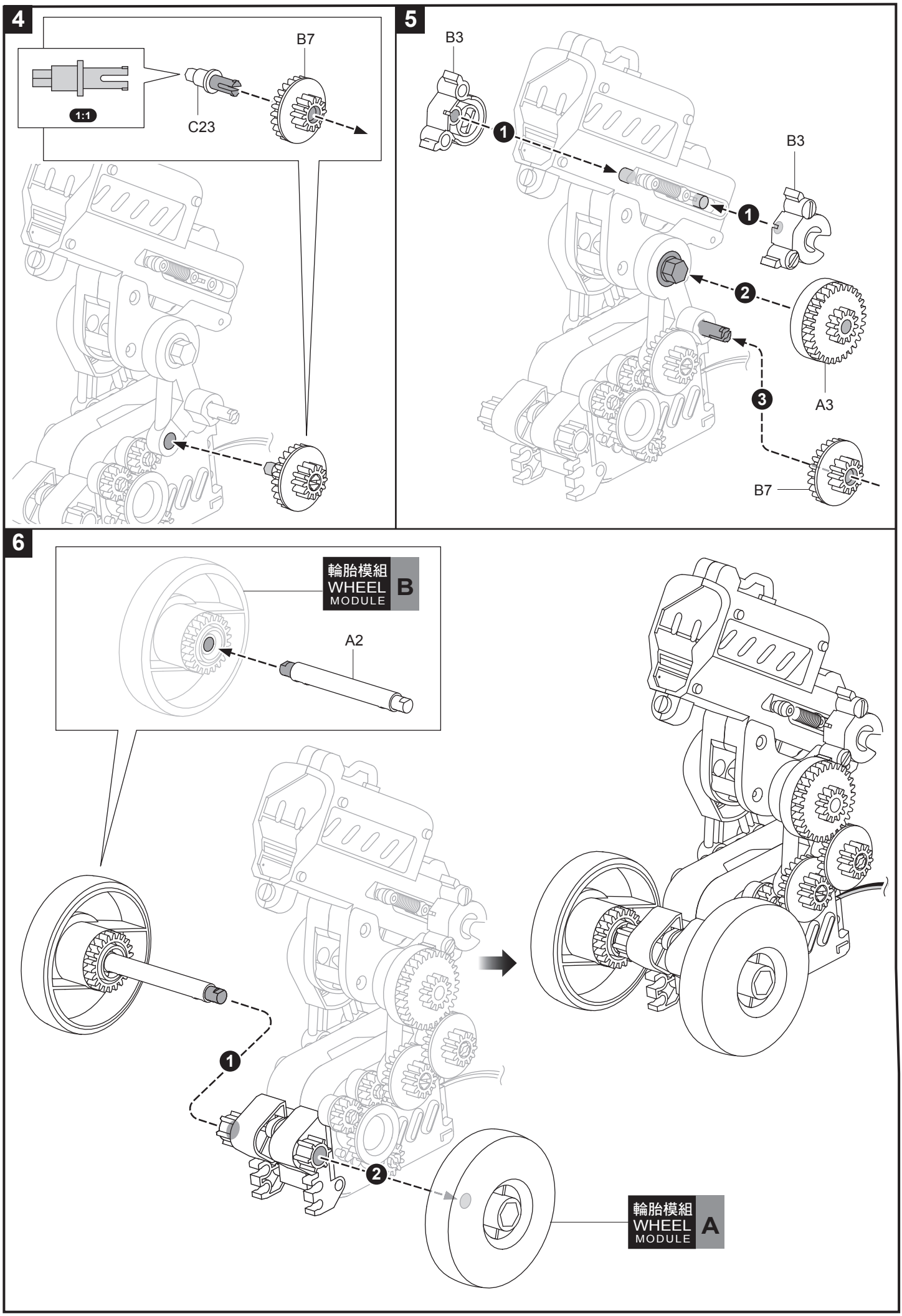
4
B7
1:1
C23
5
B3
1
B3
1
2
A3
3
B7
6
輪胎模組
WHEEL
MODULE
B
A2
1
2
輪胎模組
WHEEL
MODULE
A

7

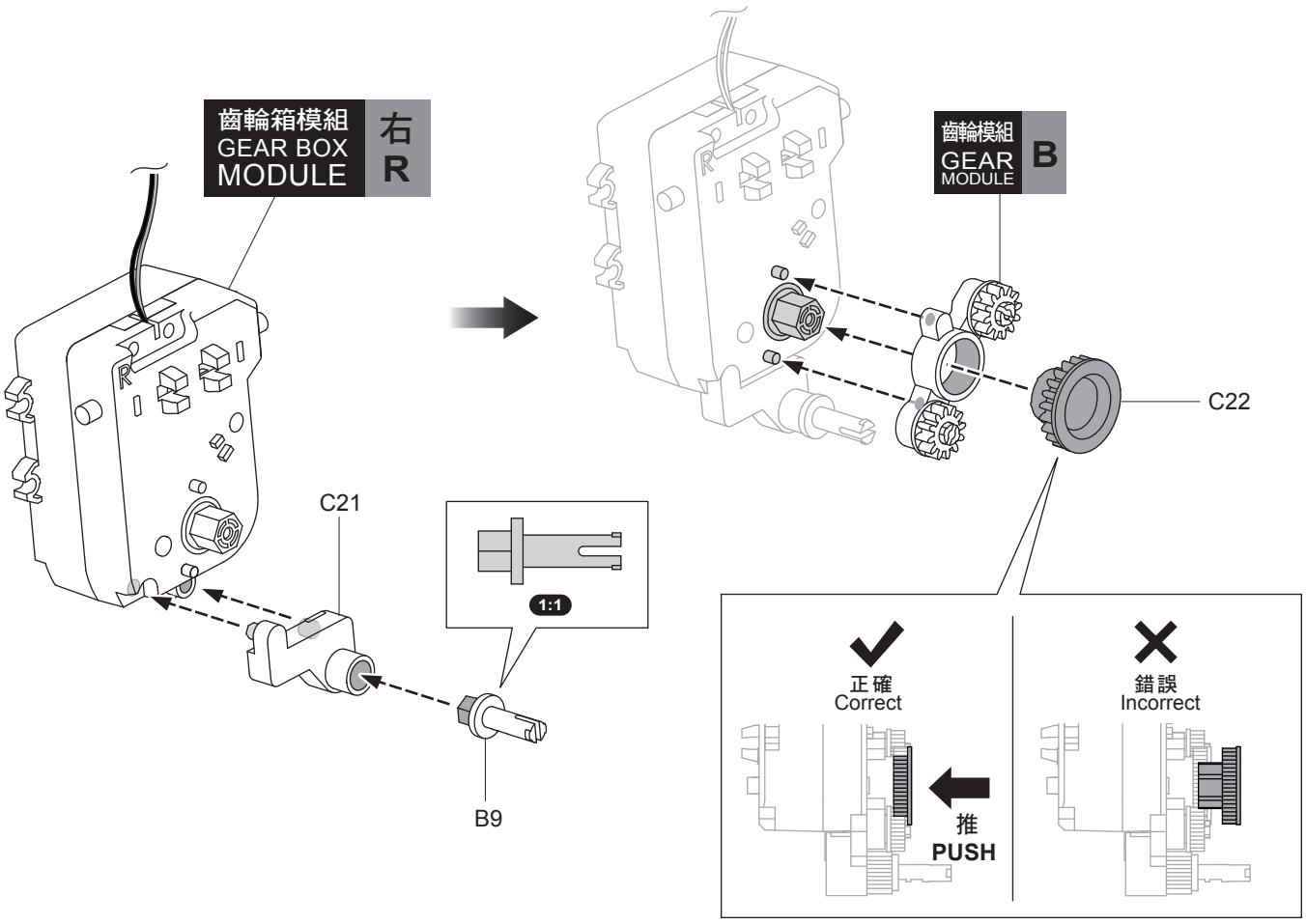
齒輪箱模組
GEAR BOX
MODULE
右
R
齒輪模組
GEAR
MODULE
B
C22
C21
1:1
B9
正確
Correct
錯誤
Incorrect
推
PUSH

8

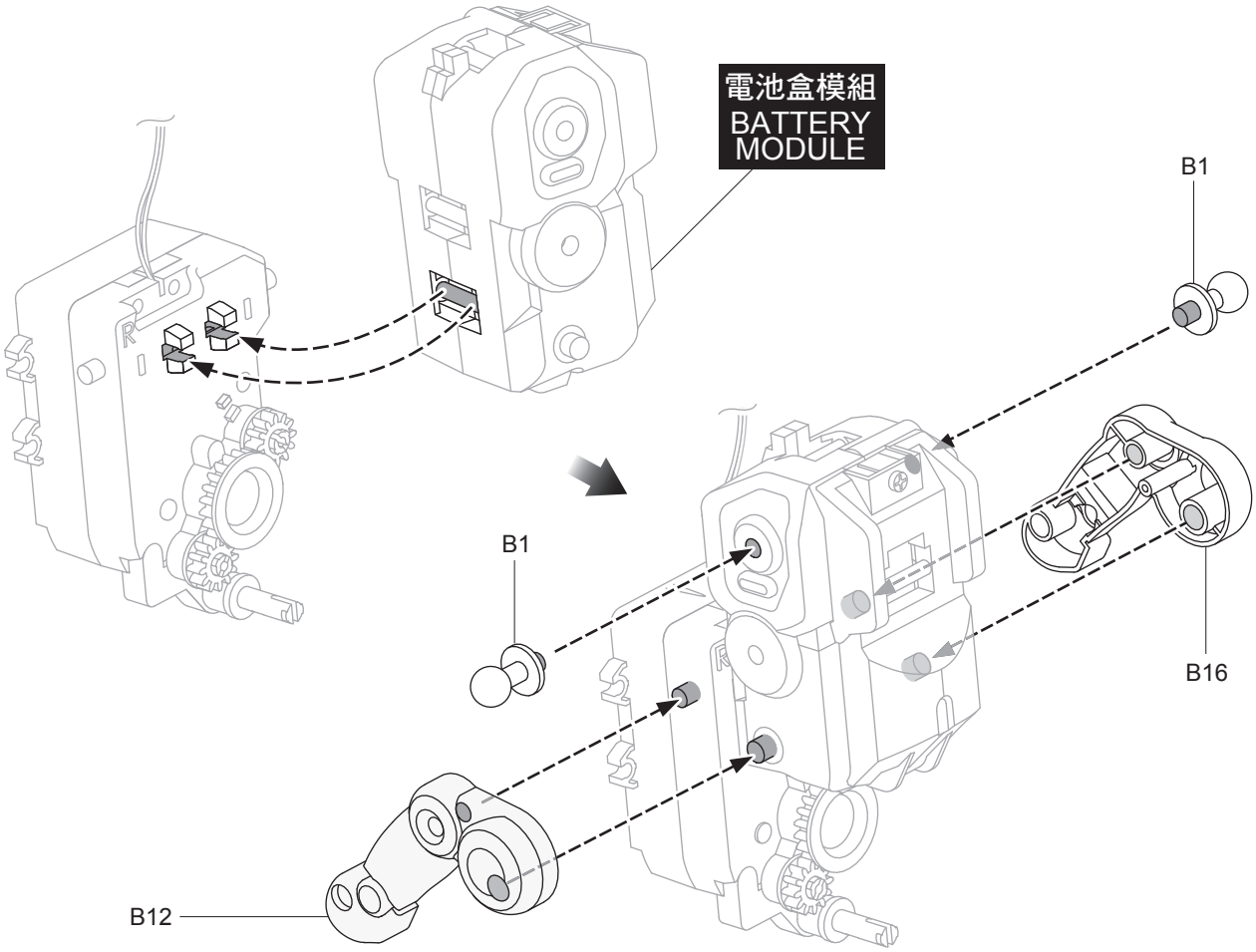
電池盒模組
BATTERY
MODULE
B1
B1
B16
B12

9

切換到模式"0"
Switch to Mode " 0 "
as shown.

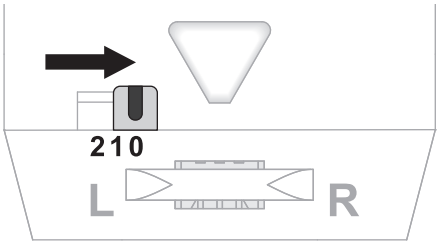

齒輪箱模組 右
GEAR BOX
MODULE R

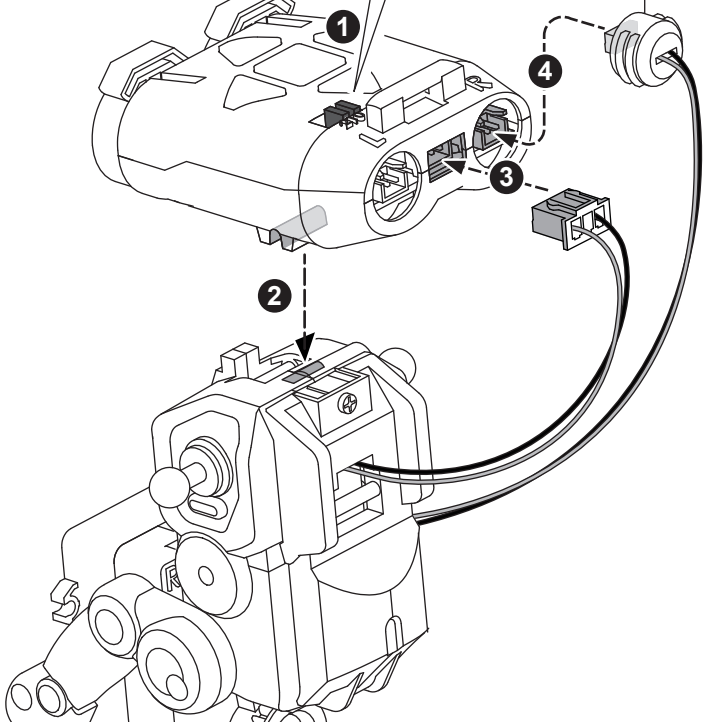

10

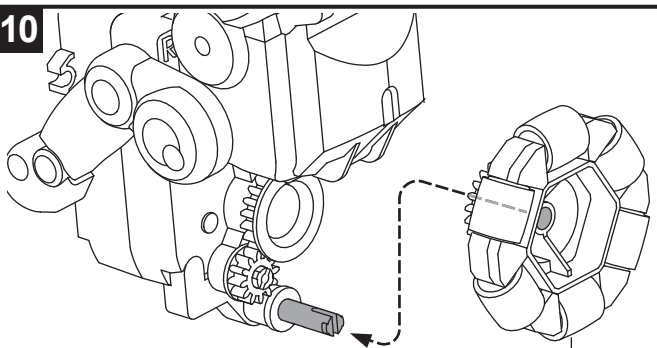

全向輪
模組
OMNI
WHEEL
MODULE

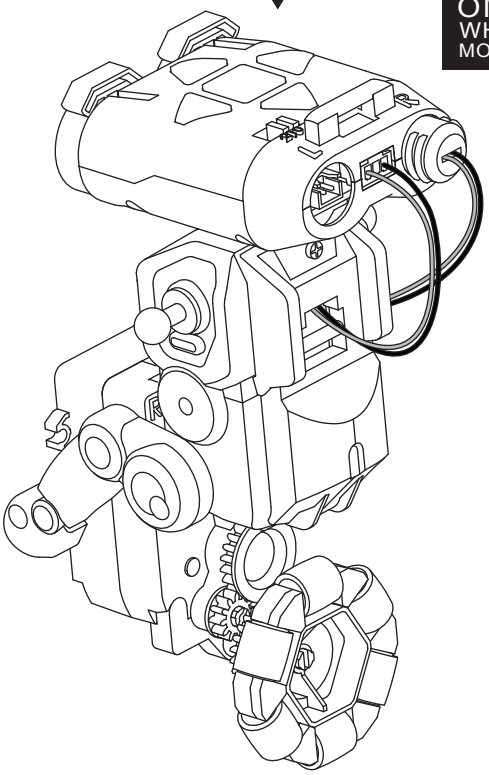

11

將步驟10與步驟6的模組組合在一起
Combine the modules of step10 and step 6 together

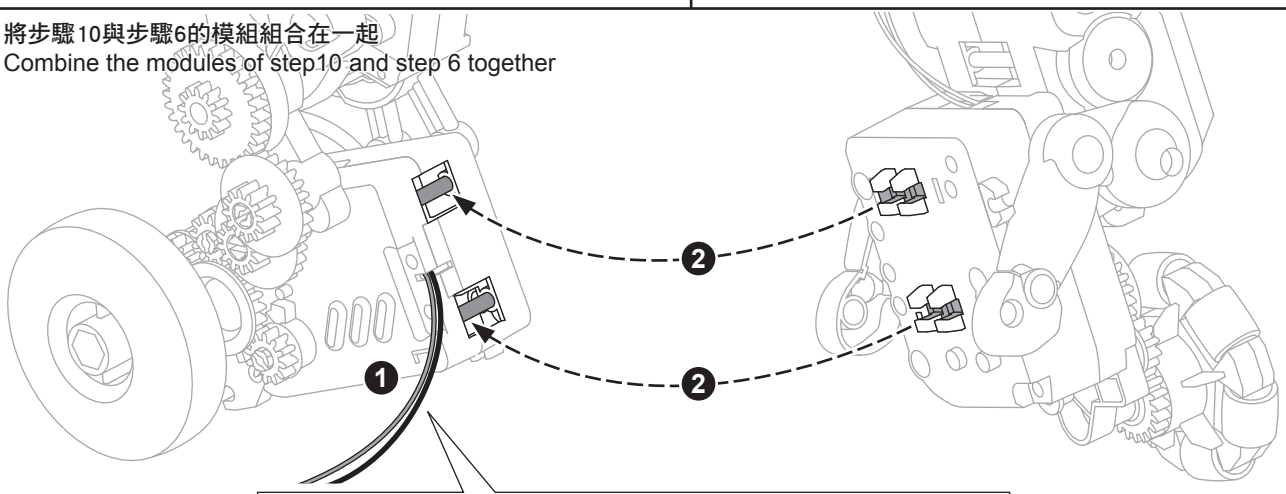

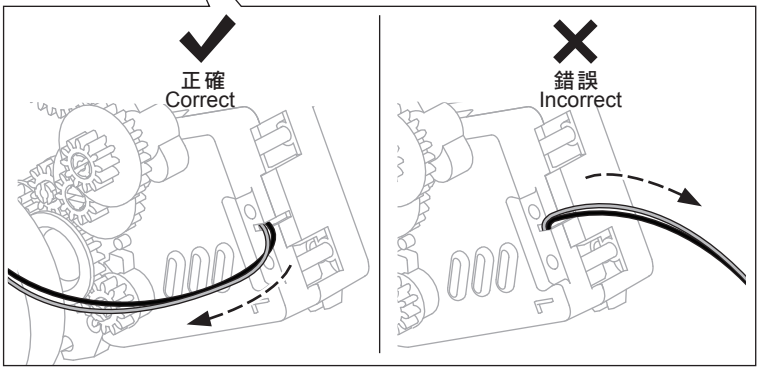

12

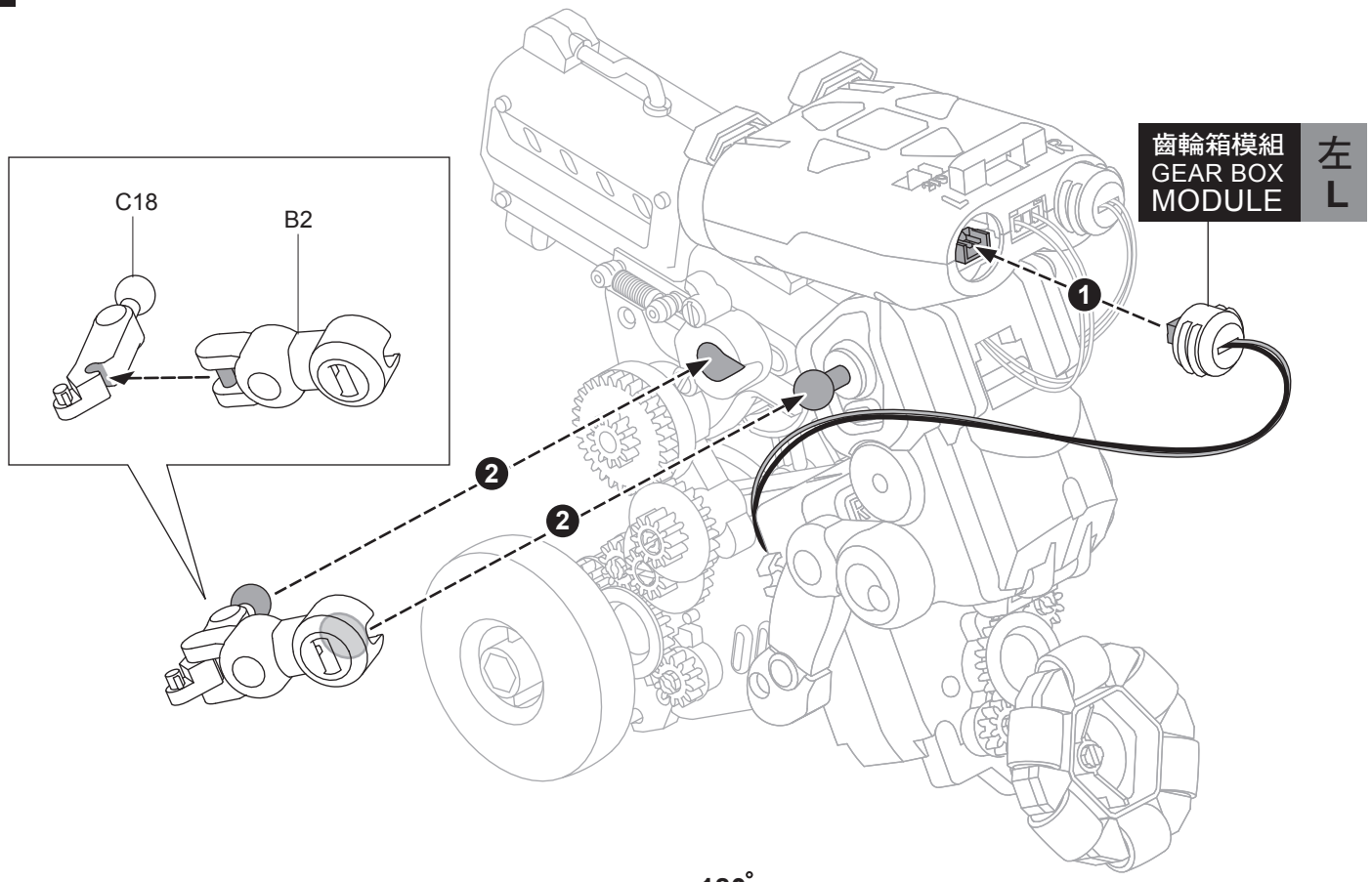

180°

13

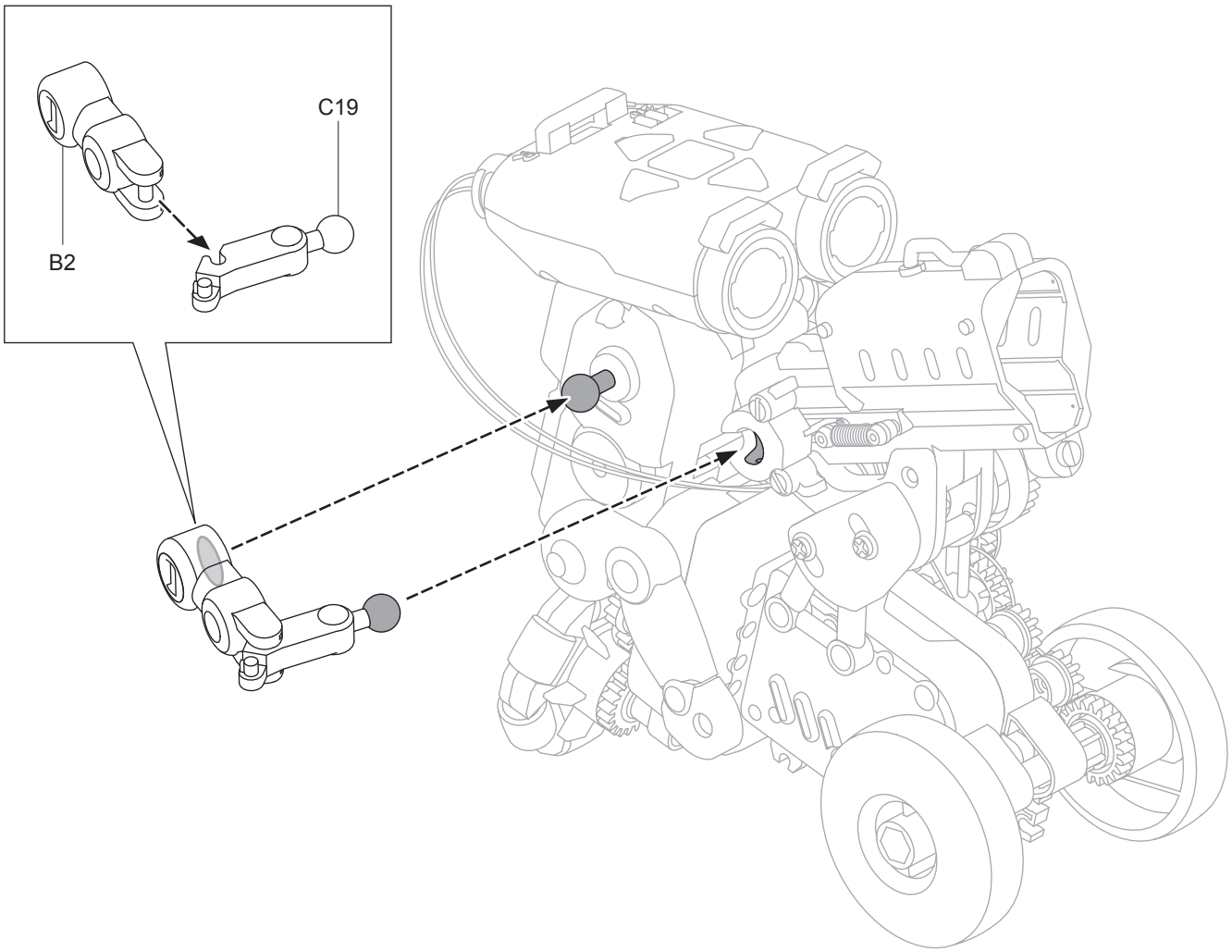

14

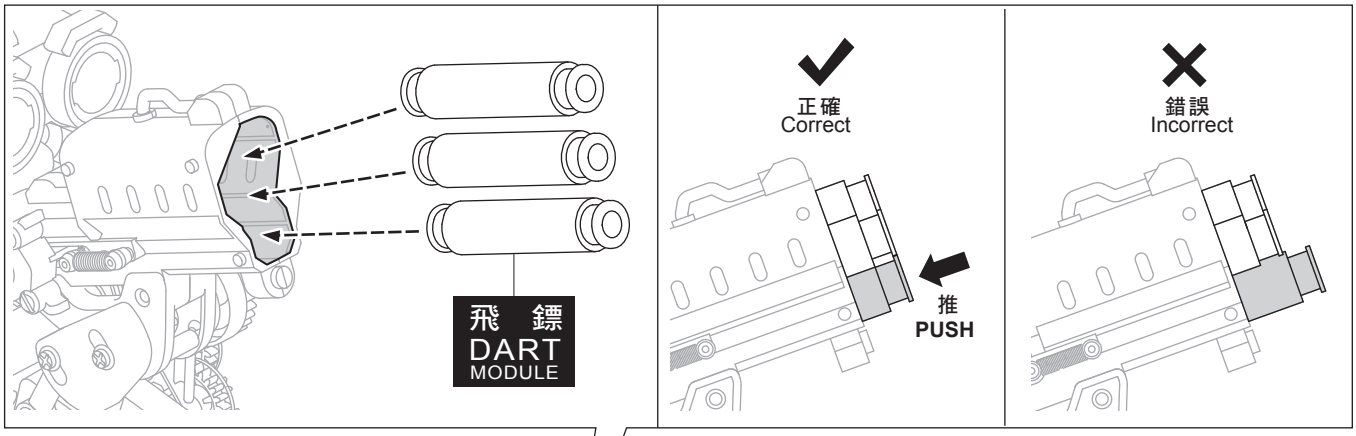

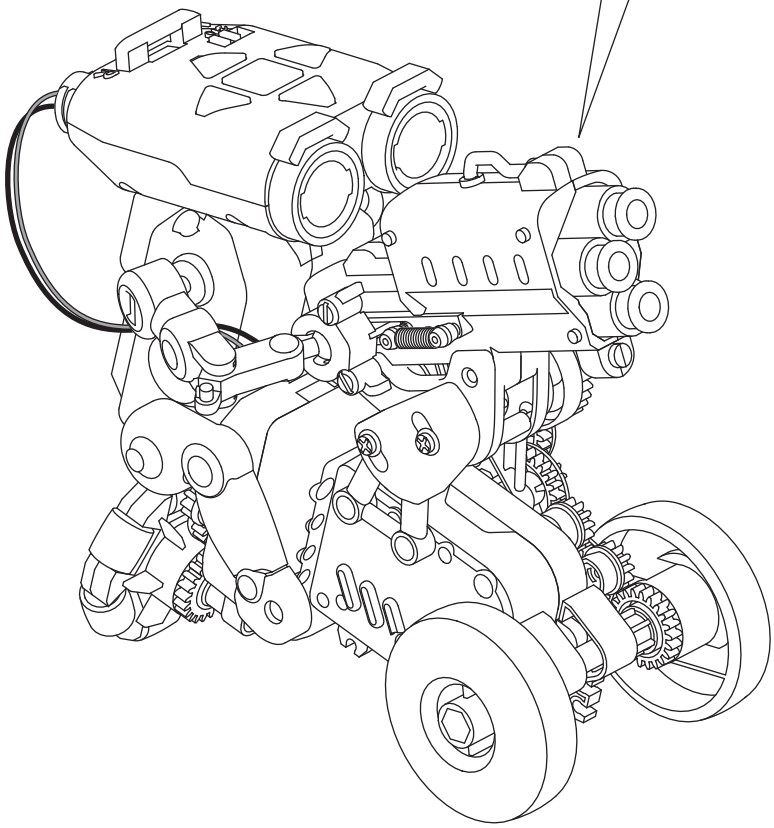

轉動機器人眉毛以做出不同的表情
You could rotate the eyebrows to create different looks.

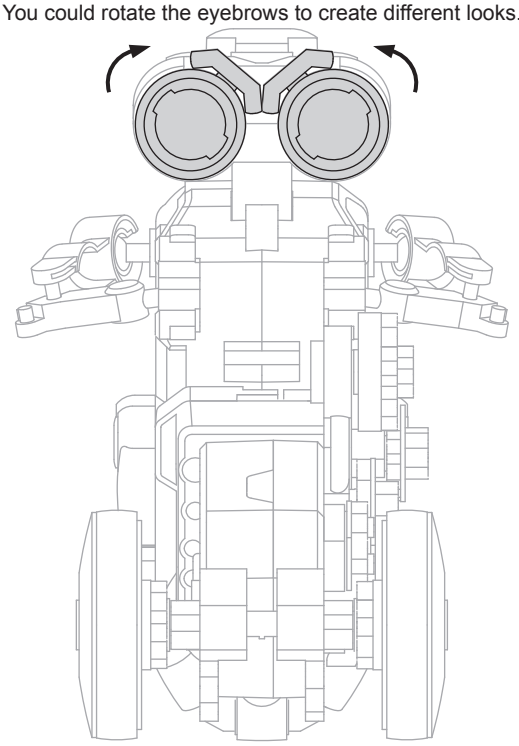

範 例 Example

請依照實際狀況編程，以下範例僅供參考
Please revise the codes according to the actual performance of the robot.
Below examples are just for references.

切 換 至 模 式 2
Switch to Mode 2

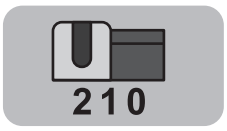

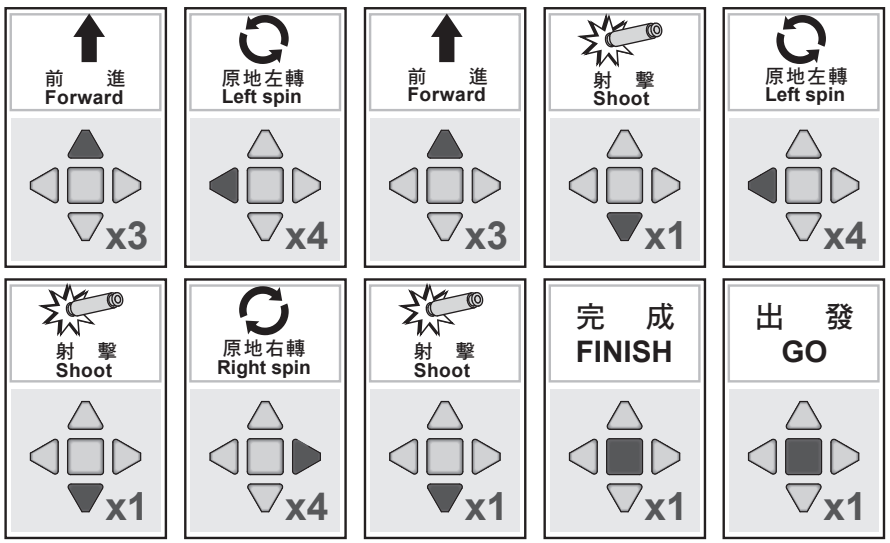

射擊位置回歸
於每次程式執行後，機器人會向前一步，此為內建預設值，目的是將狙擊槍射擊位置回歸起始點

ABOUT SHOOTING HOME POSITION
The robot will go one step forward after finishing the program. It is built-in as a default, to reset the mechanics to shooting home position.

操作方式 How to Program Your Robot

按鍵介紹 Keypad Instructions

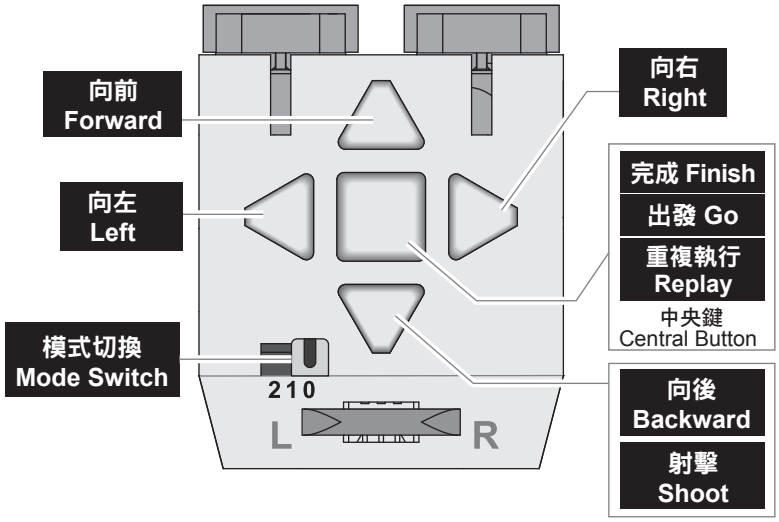

操作指引 Operation Guide

- 每次最多可輸入64個指令，當輸入第65個指令時，機器人會發出”嗶-------嗶嗶”(一長音兩短音)警示聲拒絕接收指令
  You can input up to 64 commands with the keypad buttons. This is the maximim number of inputs. Tribo will make a “Beeeee-bee- bee” sound and stop taking the following orders when the 65th input is made.
- 當遊戲狀態下，機器人發出”嗶-嗶-嗶”(三短音)警示聲時代表電量過低，請更換電池，避免造成機器人損害或自動重啟
  If Tribo emits a sound “Bee-bee-bee” while playing, it is on “low-battery” alert. Please replace batteries with new ones. If the batteries are not replaced, it could results in a crash or an automatic re-boot.
- 當機器人閒置超過一分鐘時將會發出”嗶-嗶”(兩短音)聲提示。只需按任意鍵即可喚醒機器人並繼續遊玩。請注意，每當完成編程時，必須按"完成"鍵代表結束編程，以利再次喚醒機器人時可繼續執行所下指令；如未按下” 完成” 鍵，機器人休眠後將自動消除指令記憶
  Tribo will make a sound “Bee-bee” as a reminder when he’s been left alone for more than 1 minute. To continue playing and wake him up, simply press any button on the keypad.Please note any finished coding program, with a press of “Finish” button as the end, can still be executed when Tribo is woken up. However, without pressing the “Finish” button to end the coding, the unfinished program will automatically be erased after waking him up.
- 若玩家不小心鍵入無法辨識之指令，例如同時按下左/右鍵或上/下鍵，機器人將發出警示音，玩家不須再重置指令，直接繼續編程即可
  If users accidentally input non-recognizable codes, such as right and left/up and down buttons at the same time, there is no need to reset for re-coding. The robot should emit an alarm sound and users can then finish the coding straight away from there.

依循以下指引並確認機器人是否依序動作
Follow the instructions below. Make sure they are followed in sequence.

編程創意小畫家和掃地機器人 To Code Doodler & Sweeper

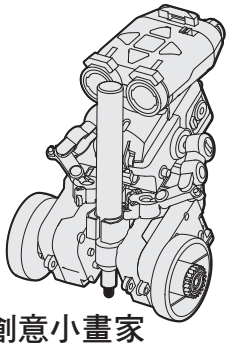

創意小畫家
Doodler

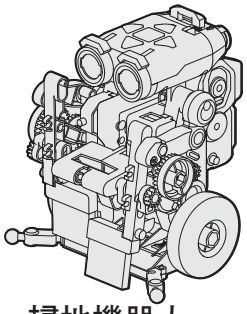

掃地機器人
Sweeper

步驟 STEP 1 切換至模式1 Switch to Mode 1



步驟 STEP 2 利用按鍵編程以設定機器人動作/行走路線
Set a path you want the robot to follow by pressing the buttons below.

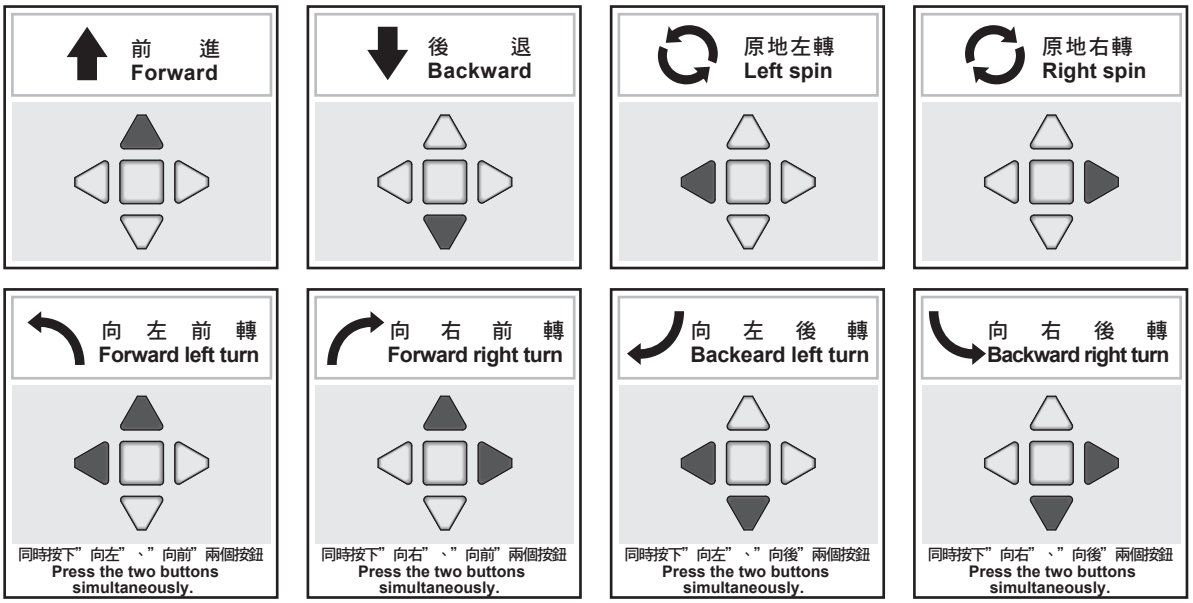

步驟 STEP 3 完成編程指令後，按下中央鍵確認
Press the central button to confirm the sequence of commands.

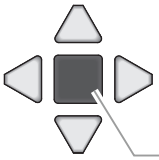

完成 Finish
中央鍵
Central Button

步驟 STEP 4 再按一次中央鍵，機器人開始執行指令動作
Press the central button again to execute.

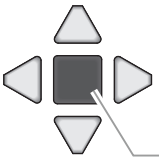

出發 Go
中央鍵
Central Button

重複執行 Replay

當機器人完成動作後，玩家可以按中間鍵命令機器人重複執行前次動作
When the robot finishes a program, users could press the central button to replay.

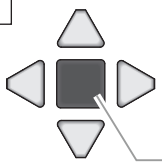

重複執行 Replay
中央鍵
Central Button

重置 Reset

經由以下兩種方式可執行新的編程指令
To code a new program, users could do either the options of below.

方　式 01 **Option 01**	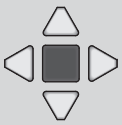	長按中央鍵 1 秒鐘 Long-press the central button for 1 seconds.
方　式 02 **Option 02**	 2 1 0	先切換到模式 0，再切換到模式 1 或 2 Switch to Mode0, and then switch to another mode (1or2) to code.

編程狙擊神射手 To Code Shooter

步驟 STEP 1 切換至模式 2
Switch to Mode 2



狙擊神射手
Shooter

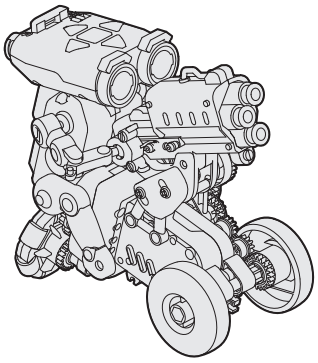

步驟 STEP 2 利用按鍵編程以設定機器人動作/行走路線
Set a path you want the robot to follow by pressing the buttons below.

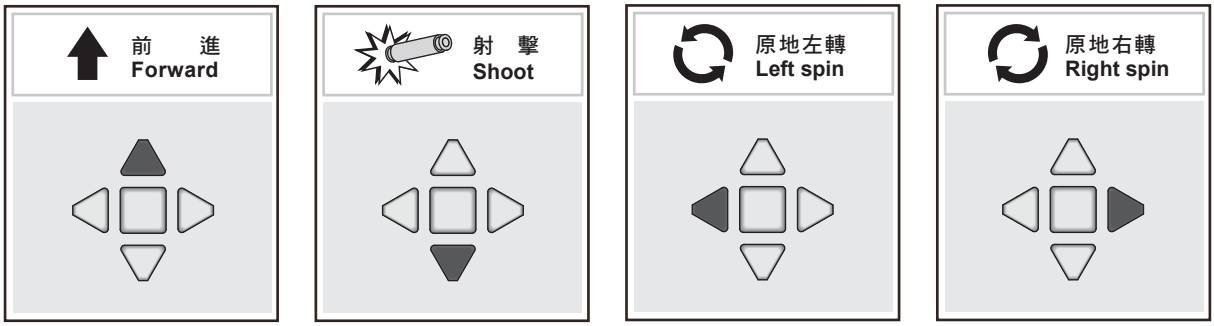

步驟 STEP 3 完成編程指令後，按下中央鍵確認
Press the central button to confirm the sequence of commands.

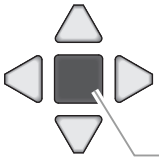

完成 Finish
中央鍵
Central Button

步驟 STEP 4

再按一次中央鍵，機器人開始執行指令動作
Press the central button again to execute.

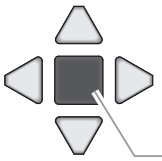

出發 Go
中央鍵
Central Button

重複執行 Replay

當機器人完成動作後，玩家可以按中間鍵令機器人重複執行前次動作
When the robot finishes a program, users could press the central button to replay.

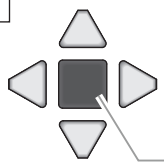

重複執行 Replay
中央鍵
Central Button

重置 Reset

經由以下兩種方式可執行新的編程指令
To code a new program, users could do either the options of below.

方　式01 **Option 01**	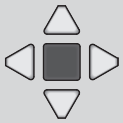	長按中央鍵1秒鐘 Long-press the central button for 1 seconds.
方　式02 **Option 02**	 2 1 0	先切換到模式0，再切換到模式1或2 Switch to Mode 0, and then switch to another mode (1 or 2) to code.

更換電池方式 How to Replace the Batteries

1

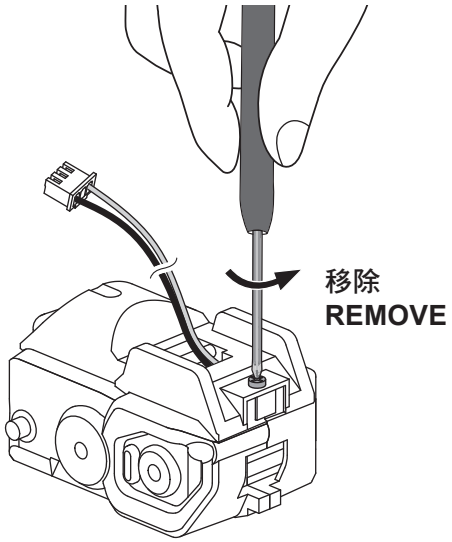

2

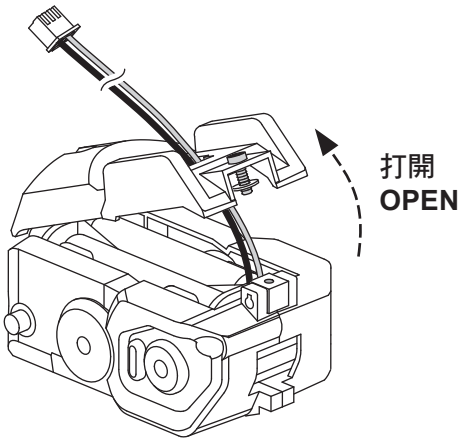

3

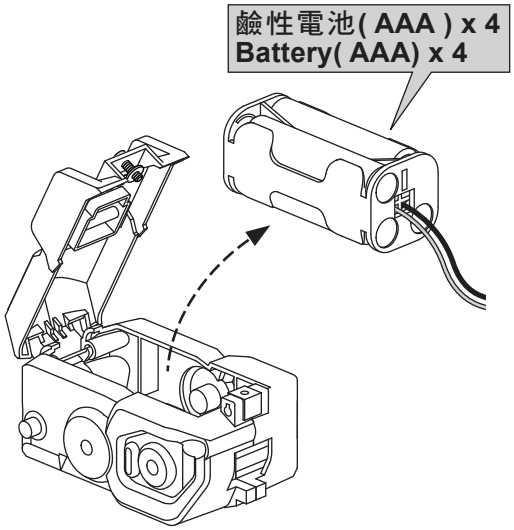

- 電池移除或更換應由成人或在成人監督下進行。
  Installation, removal and replacement of batteries should be carried out by adults or under adults supervision.
- 請避免電池或電池連接器端子短路。
  Avoid short circuiting the contacts in the battery compartment or the battery terminals.
- 請勿混用新舊電池及不同廠牌、種類的電池，以免造成危險或電器損耗。
  Do not mix used batteries and new batteries or batteries of different types.
- 請勿混合鹼性、碳鋅電池或充電電池使用。
  Do not mix alkaline, standard (carbon-zinc), or rechargeable (nickel-cadmium) batteries.
- 電池放入前請先確認正確正負極性方向。
  Batteries are to be inserted with the correct polarity.
- 請勿試圖對非充電電池進行充電。
  Do not attempt to recharge non-rechargeable batteries.
- 充電前請將充電電池自玩具中取出。
  Remove exhausted batteries from the product to avoid leakage.

簡易故障排除 Trouble Shooting

1. 請確認電池安裝位置是否正確，參見第9頁，步驟 3 .
1. Be sure to install batteries with correct polarity, refer to page 9, step 3.

2. 如創意小畫家/掃地機器人/狙擊神射手未正確地依循編碼動作，請確認左、右齒輪箱和按鍵模組是否組裝正確.
2. If Doodler/Sweeper/Shooter doesn't execute the program correctly, please check if the left and right gear box terminals and keypad module are assembled in the correct way.

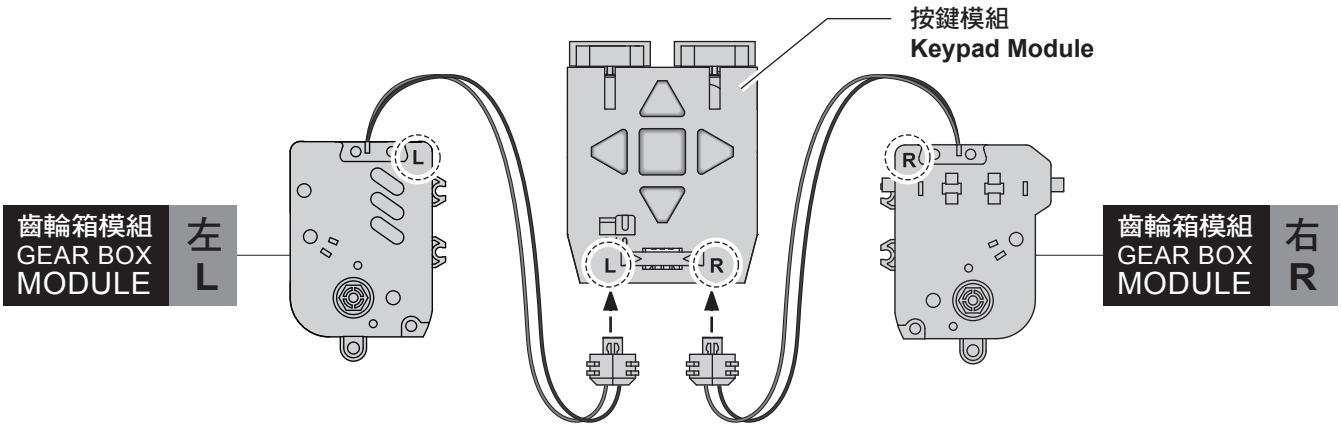

3. 如創意小畫家/掃地機器人未正確地依循編碼動作，請確認開關位置是否播到模式 1.
3. If Doodler or Sweeper doesn't execute the program correctly, please check if the robot is set to Mode 1.

4. 如狙擊神射手未正確地依循編碼動作，請確認開關位置是否播到模式 2.
4. If Shooter doesn't execute the program correctly, please check if the robot is set to Mode 2.

5. 如創意小畫家無法清楚地畫出線條，請確認筆是否安置於適當位置，參見第15頁，步驟 6.
5. If Doodler doesn't draw clear lines, please check page 15, step 6.

6. 如掃地機器人無法正常掃地，請確認B4是否安裝正確，參見第17頁，步驟 2；第18頁，步驟 5 .
6. If Sweeper doesn't clean up appropriately, please check if the part B4 on page 17 step 2 and the part B4 on page 18 step 5 are assembled in the correct way.

7. 如狙擊神射手無法直行或正常射擊，請確認齒輪模組A是否安裝正確，參見第23頁，步驟 1.
7. If Shooter doesn't go straight or shoot appropriately, please check if the GEAR MODULE A on page 23 step 1 is assembled in the correct way.

8. 如狙擊神射手的彈簧在射擊後無法回到射擊位置(見下圖1)，請逆時鐘推轉齒輪(見下圖2)
8. If Shooter doesn't return the spring to home position (image 1 below) after shooting, please push the gear counterclockwise (image 2 below).

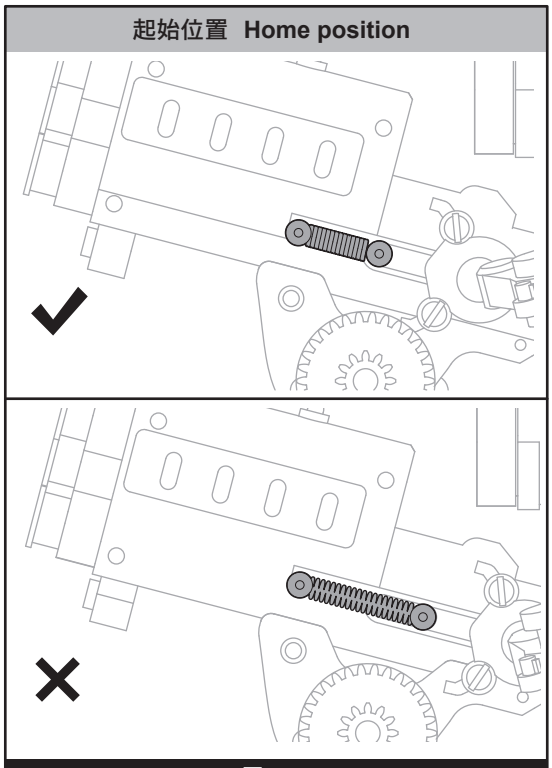

圖1
IMAGE 1

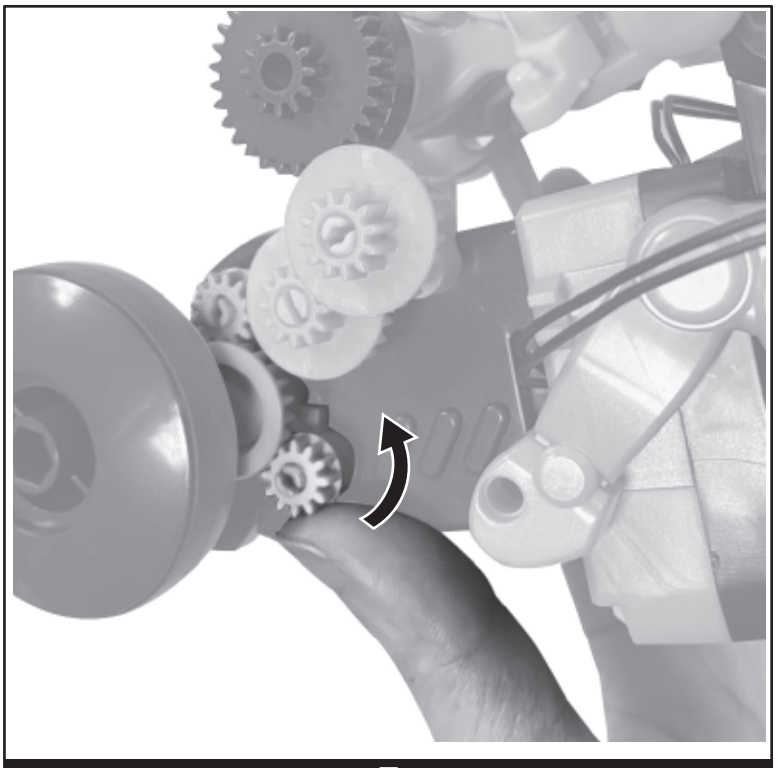

圖2
IMAGE2

若需要購買零件，請參照以下零件表
When ordering parts, please include the following

1. 請留下訂購人姓名、寄送地址、連絡電話、E-mail
   Name, address (no P.O. Box), telephone number, and email address.
2. 請註明產品名稱、產品型號、零件名稱、零件型號以及數量
   Model name and model number.Part number, part name, and quantity.
3. 如有任何需求，請洽您的經銷商
   Please contact local distributor if any query.

GE-897 三合一按鍵編程機器人 Tribo 3 in 1 Keypad Coding Robot 零件表 Parts List

零件型號Part Number	零件名稱Part Name	數量 Qty
5GE-89700P1	小齒輪(白色) Pinion Gear (White)	
5GE-89700P2	齒輪(白色) Gear 36/14T (White)	
5GE-89700P3	齒輪(灰色) Gear 32/10T (Gray)	
5GE-89700P4	齒輪(黃色) Gear 36/10T (Yellow)	
5GE-89700P5	齒輪(橘色) Gear 36T (Orange)	
5GE-89700P6	出力齒輪(灰色) Output Gear (Gray)	
5GE-89700P7	六角軸 Hex Shaft	
5GE-89700P8	圓軸 Round Shaft	
5GE-89700P9	自攻螺絲 Tapping Screw	
5GE-89700P10	自攻螺絲 Tapping Screw	
5GE-89700P11	彈簧 Spring	
5GE-89700P12	小鐵球 Steel Ball	
5GE-89700P13	泡棉貼(大) Sponge (Big)	
5GE-89700P14	泡棉貼(小) Sponge (Small)	
5GE-89700P15	馬達端子組 Motor with Connector	
5GE-89700P16	電池座 Battery Holder with Connector	
5GE-89700P17	電路板 PC Board	
5GE-89700P18	墊片 Washer	

此產品為模型組件拆封修剪或包裝不完整，恕不退換
Goods cut are not returnable.



警告及注意事項

內含小零件, 請勿讓三歲以下孩童使用, 避免誤食危險。
不可對著人臉和眼部衝撞, 避免造成意外傷害。

3in1 TRIBO
KEYPAD CODING ROBOT

DOODLER
SWEEPER
SHOOTER

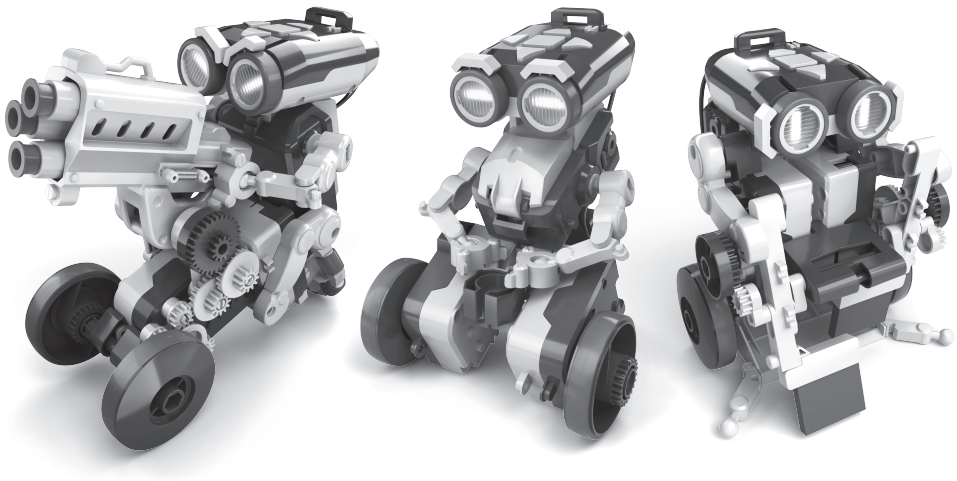

- 電池移除或更換應由成人或在成人監督下進行。
  Installation, removal and replacement of batteries should be carried out by adults or under adults supervision.
- 請避免電池或電池連接器端子短路。
  Avoid short circuiting the contacts in the battery compartment or the battery terminals.
- 請勿混用新舊電池及不同廠牌、種類的電池，以免造成危險或電器損耗。
  Do not mix used batteries and new batteries or batteries of different types.
- 請勿混合鹼性、碳鋅電池或充電電池使用。
  Do not mix alkaline, standard (carbon-zinc), or rechargeable (nickel-cadmium) batteries.
- 電池放入前請先確認正確正負極性方向。
  Batteries are to be inserted with the correct polarity.
- 請勿試圖對非充電電池進行充電。
  Do not attempt to recharge non-rechargeable batteries.
- 充電前請將充電電池自玩具中取出。
  Remove exhausted batteries from the product to avoid leakage.

Pro'sKit®
寶工實業股份有限公司
PROKIT'S INDUSTRIES CO., LTD
新北市新店區民權路130巷7號5樓
5F, NO.7, LN. 130, MINQUAN RD., XINDIAN DIST.,
NEW TAIPEI CITY, TAIWAN Post code:231023
服務專線Tel:+886 2 2218 3233
E-mail:pk@mail.prokits.com.tw
www.proskit.com
https://shop.prokits.com.tw
©2026 Prokit's Industries Co., LTD. All rights reserved. 2026001