Pro'sKit®

GK-366U

无线锂电热熔胶枪

使用说明书
1st Edition, 2024
©2024 Copyright by Prokit's Industries Co., Ltd.

1页

■产品信息

规格	GK-366U
功率	5-15W
出胶量	2g/min
加热时间	≤ 40s
熔胶温度	170±10°C
胶棒规格	Φ7mm
发热芯	PTC
空閒自动关机	5mins
输入电压	DC 5V/2A
充电时间(大约)	100mins
使用时间(大约)	60mins
电池容量	Li-ion 3.7V 2000mAh
尺寸	135x120x55mm
重量	180g
配件	Type-C USB充电线, 彩色胶棒 x 20pcs

2页

■产品结构

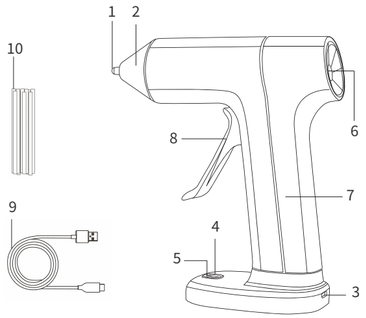

1.出胶嘴　2.硅胶枪咀套　3.TYPE-C接口　4.工作指示灯
5.电源开关　6.胶棒入口　7.胶枪手柄　8.扳机推进装置
9.TYPE-C充电线　10.胶棒

3页

一、性能特点

本产品采用陶瓷PTC发热芯作为发热元件。具有发热速度快及自动恒温的特性。当胶枪温度升至预设温度时，温度将恒温保持在一个温度范围内不会在继续上升，此特性能有效防止因发热体过热对胶枪造成的损坏，从而达到延长胶枪的使用寿命。

1.**出胶快**，胶枪预热40秒即可快速出胶。

2.**自动断电**，胶枪5分钟不作业具有自动断电功能，达到节约电量的用途。

3.**便捷充电**，胶枪底部有通用TYPE-C充电接口，方便随时充电。

4.**续航持久**，大容量动力型锂电池，续航时间长达60分钟。

二、使用方法

插入胶棒　预热等待40秒　扳机推动胶棒　挤出胶水

1、将直径6.8-7.2mm的热熔胶棒从进胶口插入推至枪腔。
2、长按开关键2秒，工作指示灯快速闪烁，等待胶枪启动加热30秒后，工作指示灯变为绿灯长亮，表示加热完成，然后轻按扳机，让熔胶自然流出，即可开始粘结作业。
3、工作完毕，切勿从进胶口拉出胶条。下次使用时通电即可正常使用。
4、当使用完胶枪后，长按开关键2秒胶枪关机，让它冷却后再存放起来。

4页

三、注意事项

1、首次使用时，电热元件会产生轻微烟雾，此属于正常现象，十分钟后会自动消失。
2、预热时间不够时，不能强行挤胶，过分用力可能会损坏胶枪。
3.接通电源后胶枪处于备用状态(静待五分钟后自动关闭电源)。
4、指示灯：开机时绿灯闪亮，30秒后绿灯长亮。充电：长亮红灯，闪亮绿灯时可用。电池电力不足时，指示灯熄灭。
5、断电保护：通电后5分钟不使用自动断电，自动断电后全部灯熄灭，并且不会重新启动，只有再按开关2秒才能启动。
6、充电功能：TYPE-C充电口，5V输入，充电电流2A，4.2V充满停充，充电时可以使用。
7、胶枪不宜在冷风直吹下工作，否则会降低工作效率和损耗电能。
8、胶枪不宜在高温环境下工作，否则会影响胶枪的正常工作或出现不良的情况。
9、胶枪不适用于粘合沉重的物件或需要强力粘性的物件。
10、使用胶条的品质将直接影响热熔胶枪的功能和工作物件的质量。
11、12周岁以下要在成人陪同下使用。

警告：

1、由于使用中热熔胶枪温度极高，切不可以用手接触喷嘴及熔胶。
2、本产品内置锂电池，请勿在高温环境下使用或丢弃在火内以免发生爆炸等危险的情况。
3、非专业人员不可以自行拆卸热熔胶枪。
4、切勿让小孩触及，并存放于安全的地方。
5、除熔胶外，不可作任何用途。

Pro'sKit®
宝工实业股份有限公司
PROKIT' S INDUSTRIES CO., LTD

PROKIT'S INDUSTRIES CO., LTD.
www.prokits.com.tw
ISO 9001 CERTIFIED
©2024 Prokit's Industries Co., LTD. All rights reserved. 2024007

制造商：宝工实业股份有限公司
地 址：台湾台北新北市新店区民权路130巷7号5楼
电 话：886-2-22183233
E-mail: pk@mail.prokits.com.tw

销售/生产商：上海宝工工具有限公司
地址：上海市浦东新区唐桥东路1365弄25号
电话：021-68183050
原产地：中国 上海
服务热线：400 1699 629

5页

(正面)

Pro'sKit®

GK-366U

Cordless Glue Gun

User's Manual
1st Edition, 2024
©2024 Copyright by Prokit's Industries Co., Ltd.

1页

■ Product Information

SPECIFICATION	GK-366U
Power consumption	5-15W
Flow of glue	2g/min
Preheating time	≤ 40s
Melting temperature	170±10°C
Glue stick diameter	Φ7mm
Heating element	PTC
Automatic power off (no operate)	5mins
Input parameter	DC 5V/2A
Charging time (approx)	100mins
Working time (approx)	60mins
Battery	Li-ion 3.7V 2000mAh
Size	135x120x55mm
Weight (approx)	180g
Accessory	Type-C USB cord, Glue sticks x20pcs

2页

■ Product Structure

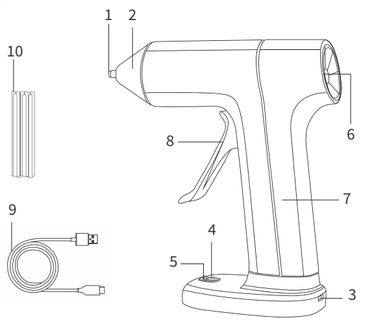

1.Nozzle　2.Silicone Gun Nozzle Set　3.TYPE-C Interface
4.Power Indicator light　5.Power Switch　6.Glue Stick Inlet
7.Glue Gun Handle　8.Trigger Propulsion Device　9.TYPE-C Charging Cable
10.Glue Stick

3页

1. Performance Features

This product uses a ceramic PTC heating core as the heating element. It has the characteristics of fast heating speed and automatic constant temperature. When the temperature of the glue gun reaches the preset temperature, the temperature will be maintained within a certain range and will not continue to rise. This feature effectively prevents damage to the glue gun caused by overheating of the heating element, thus extending the service life of the glue gun.

1.**Fast glue dispensing:** The glue gun can quickly dispense glue after preheating for 40 seconds.

2.**Auto power-off:** The glue gun has an automatic power-off function if it is not operated for 5 minutes, saving energy.

3.**Convenient charging:** The glue gun has a universal TYPE-C charging port at the bottom, making it easy to charge anytime.

4.**Long-lasting working time:** It is equipped with a high-capacity lithium battery, providing a continuous usage time of up to 60 minutes.

2. Instructions for Using

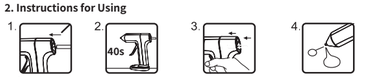

Inserting the glue stick　Wait for 40 seconds for preheating　Squeeze the trigger to advance the glue stick　Dispense the glue

1. Insert the hot melt glue stick with a diameter of 6.8-7.2mm into the glue inlet and push it into the barrel.
2. Press and hold the power button for 2 seconds. The battery indicator light will rapidly flash , indicating that the glue gun is heating up. Wait for 30 seconds until the battery indicator light turns green and stays on steadily, indicating that the heating is complete. Then lightly press the trigger to allow the melted glue to flow out, and you can start your bonding work.
3. After finishing your work, do not pull out the glue stick from the glue inlet. Simply power off the glue gun, and it will be ready for normal use when powered on next time.
4. When you stop using the glue gun, press and hold the power button for 2 seconds to turn it off. Let it cool down before storing it.

4页

3. Precautions to Note

1. During initial use, there may be slight smoke from the heating element, which will disappear automatically after ten minutes.
2. Do not forcefully dispense glue if the preheating time is insufficient.
3. After plugging in the power, the glue gun will enter standby mode and automatically power off after five minutes of inactivity.
4. Indicator lights: the green light flashes when turning on, and after 30 seconds, it stays green light.during charging, its red light, when flashing green light can be used. the indicator light goes out when battery is low power.
5. Power protection: If the glue gun is no operate for five minutes after powering on, it will automatically power off. All lights will turn off, and it will only restart when the power button is pressed for two seconds.
6. Charging function: The glue gun has a Type-C charging port with a 5V input and a charging current of 2A. Charging stops when the battery is fully charged. It can be used during charging.
7. The glue gun should not be used in direct cold airflow as it reduces work efficiency and waste energy.
8. The glue gun should not be used in high-temperature environments as it may affect normal operation or cause malfunctions.
9. The glue gun is not suitable for bonding heavy objects or objects that require strong adhesion.
10. The quality of the glue sticks directly affects the functionality of the hot glue gun and the quality of the bonded items.
11. Children under the age of 12 must be accompanied by an adult.

4. Cautions

1. Do not touch the nozzle or molten glue with your hands due to the extremely high temperature of the hot glue gun during use.
2. This product contains a built-in lithium battery. Do not use or discard it in high-temperature environments or expose it to fire to avoid the risk of explosion.
3. Non-professionals should not attempt to disassemble the hot glue gun on their own.
4. Keep out of reach of children and store in a safe place.
5. The hot glue gun should only be used for melting glue and should not be used for any other purposes.

5页

(背面)